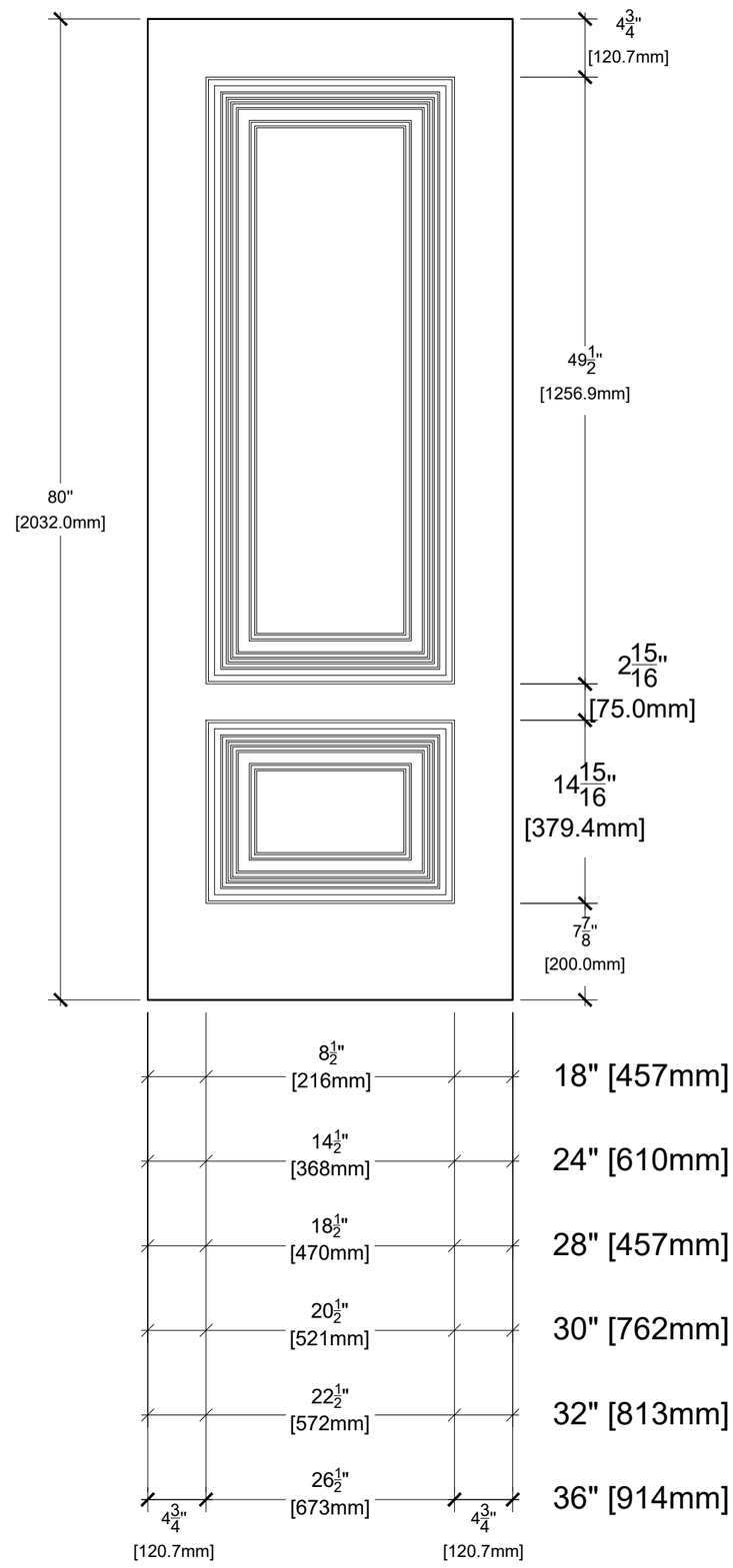

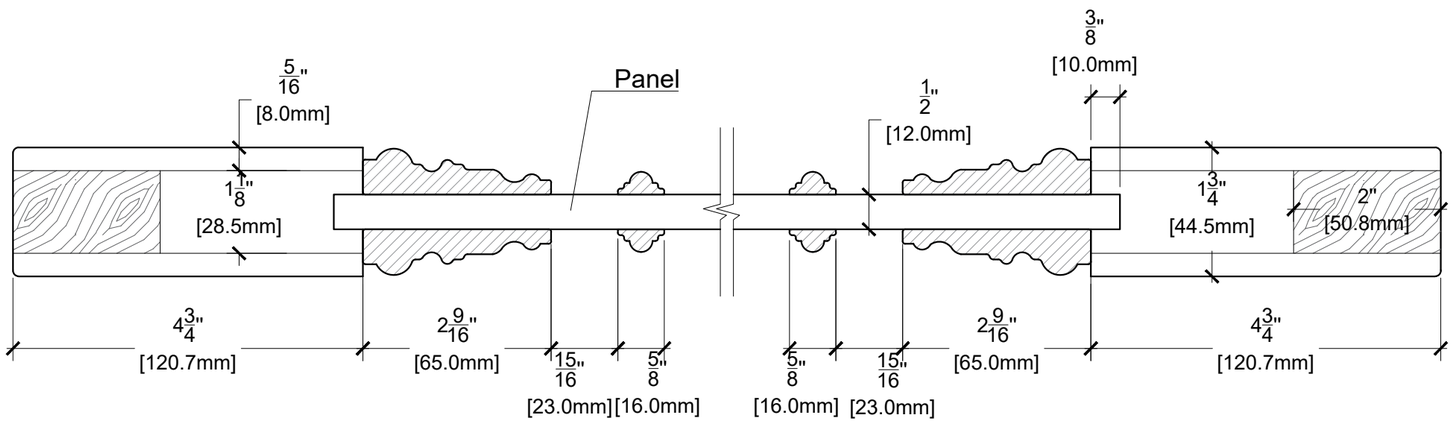

ALMES DOORS

Model: Palladio Due Solid

Configuration: Slab 80"