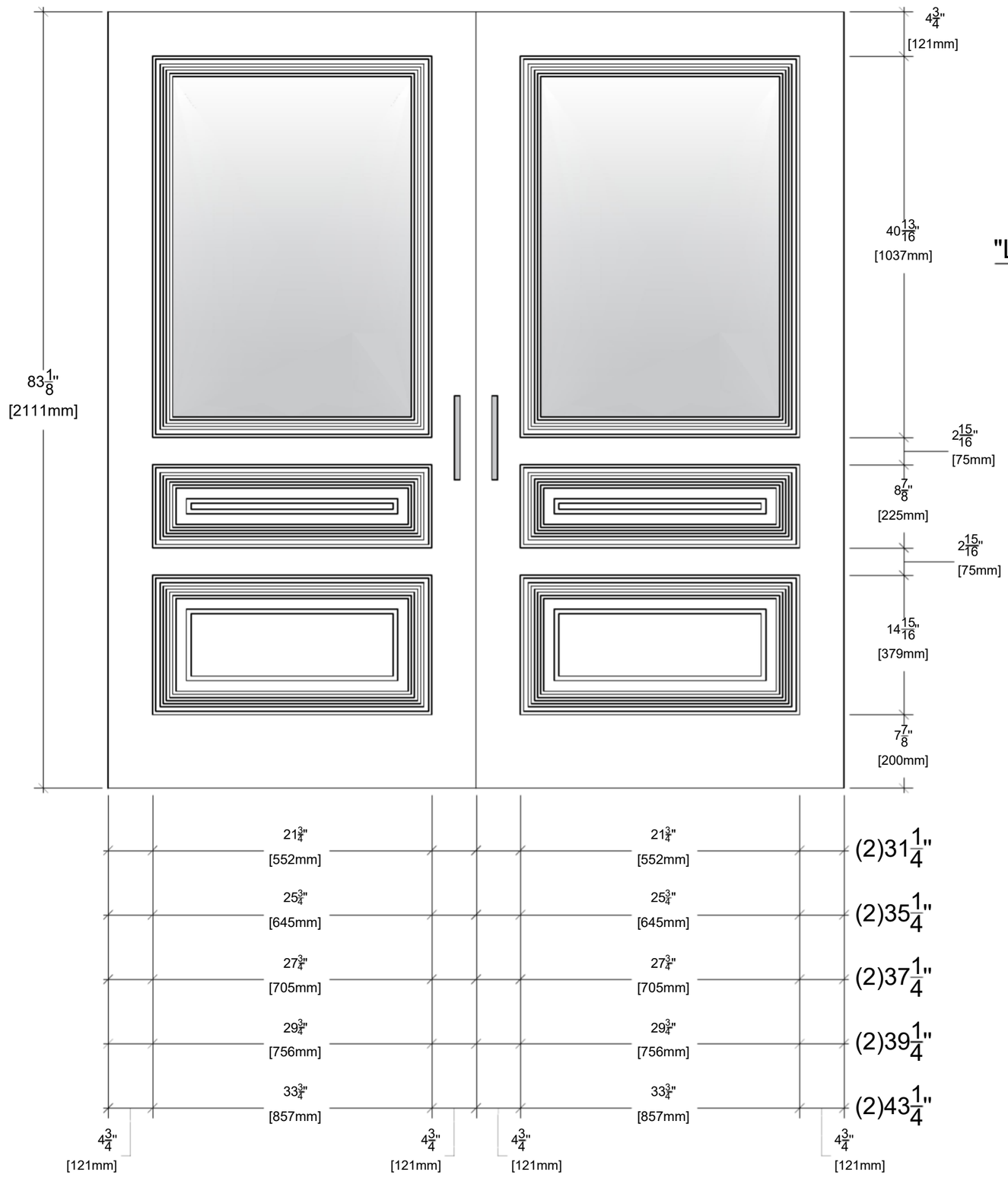

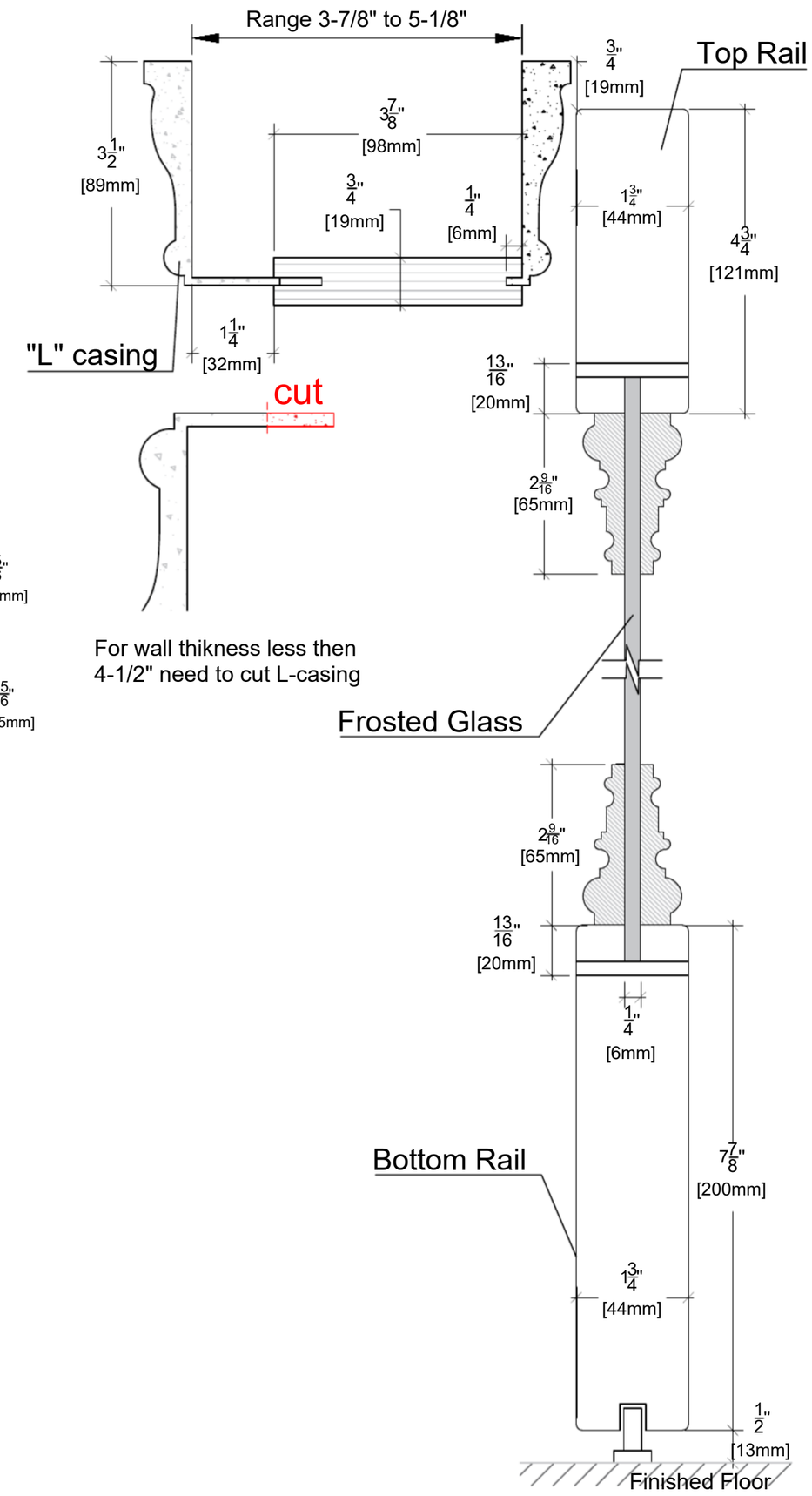

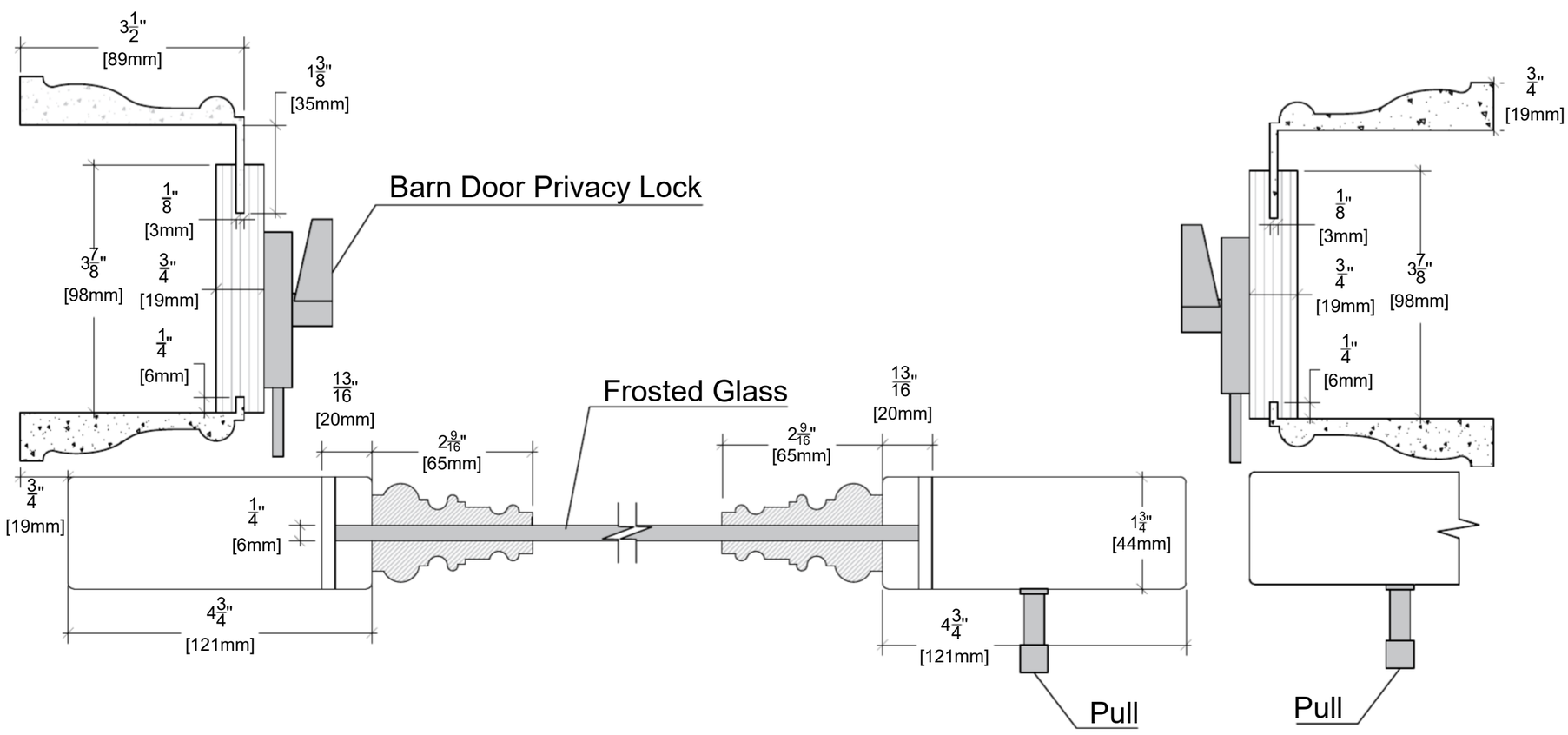

ALMES DOORS

Model: Palladio Tre - Frosted Glass

Configuration: D Barn 82"