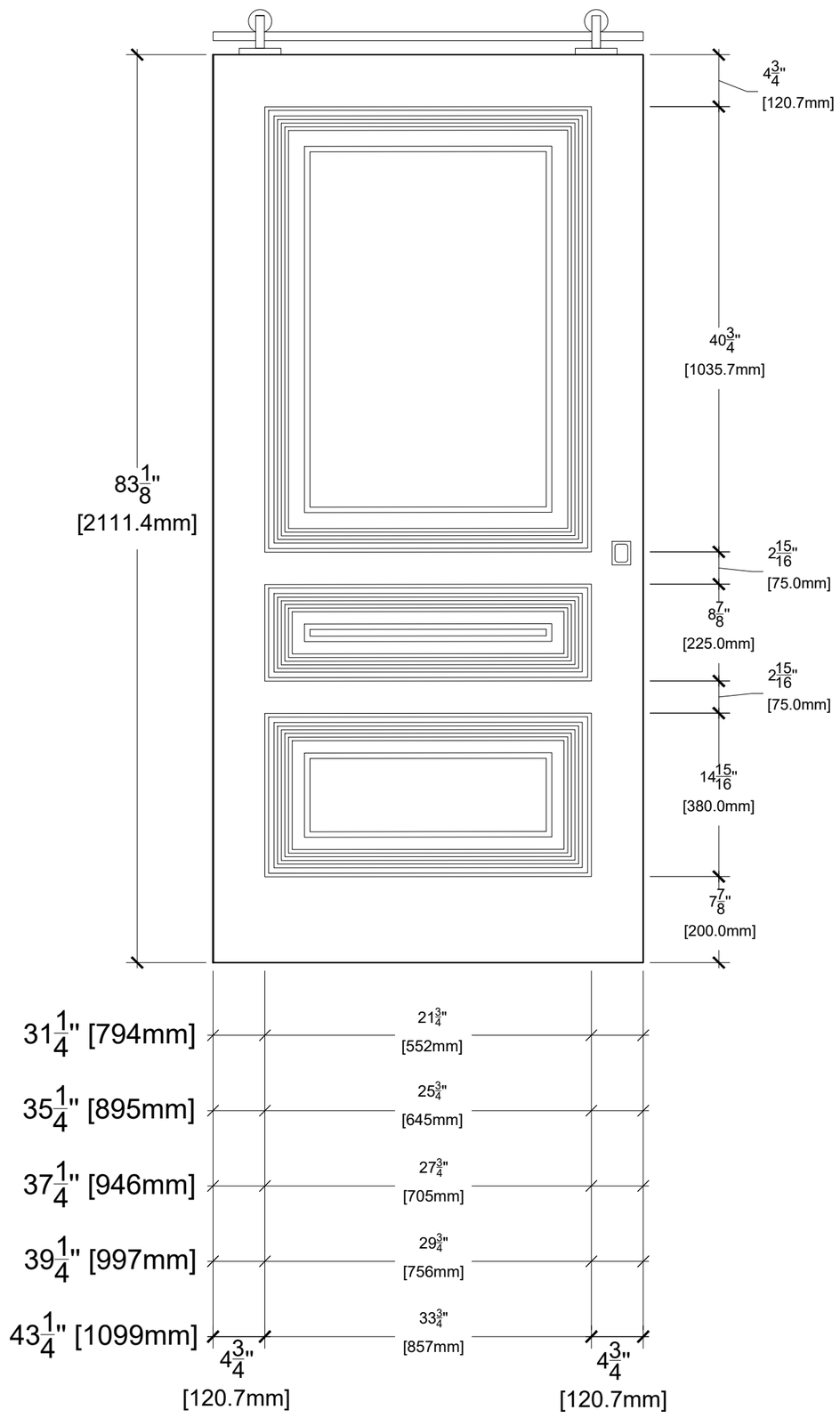

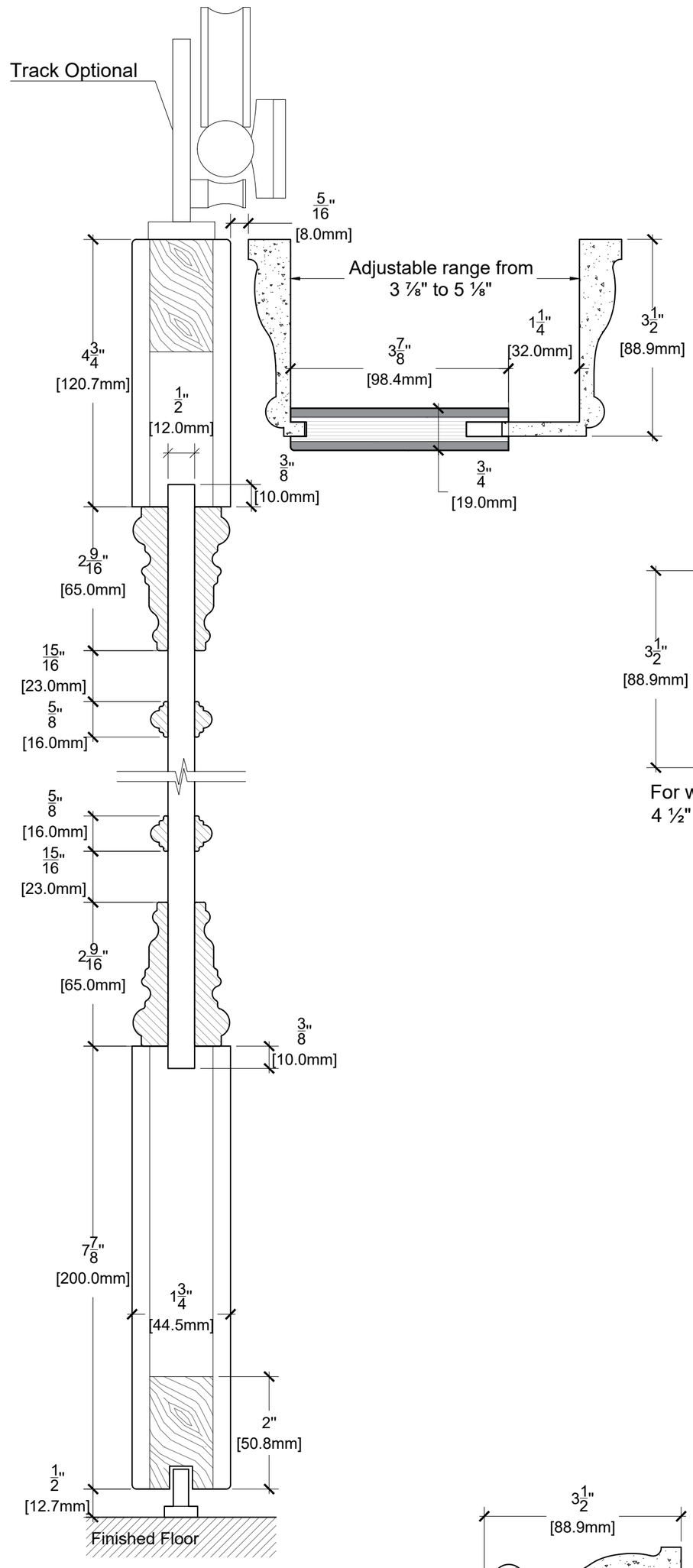

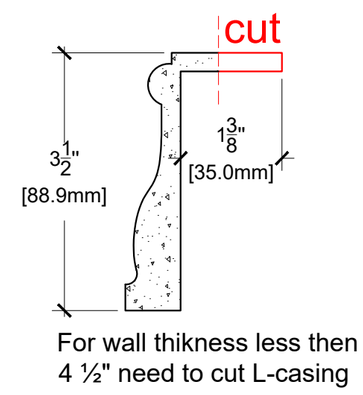

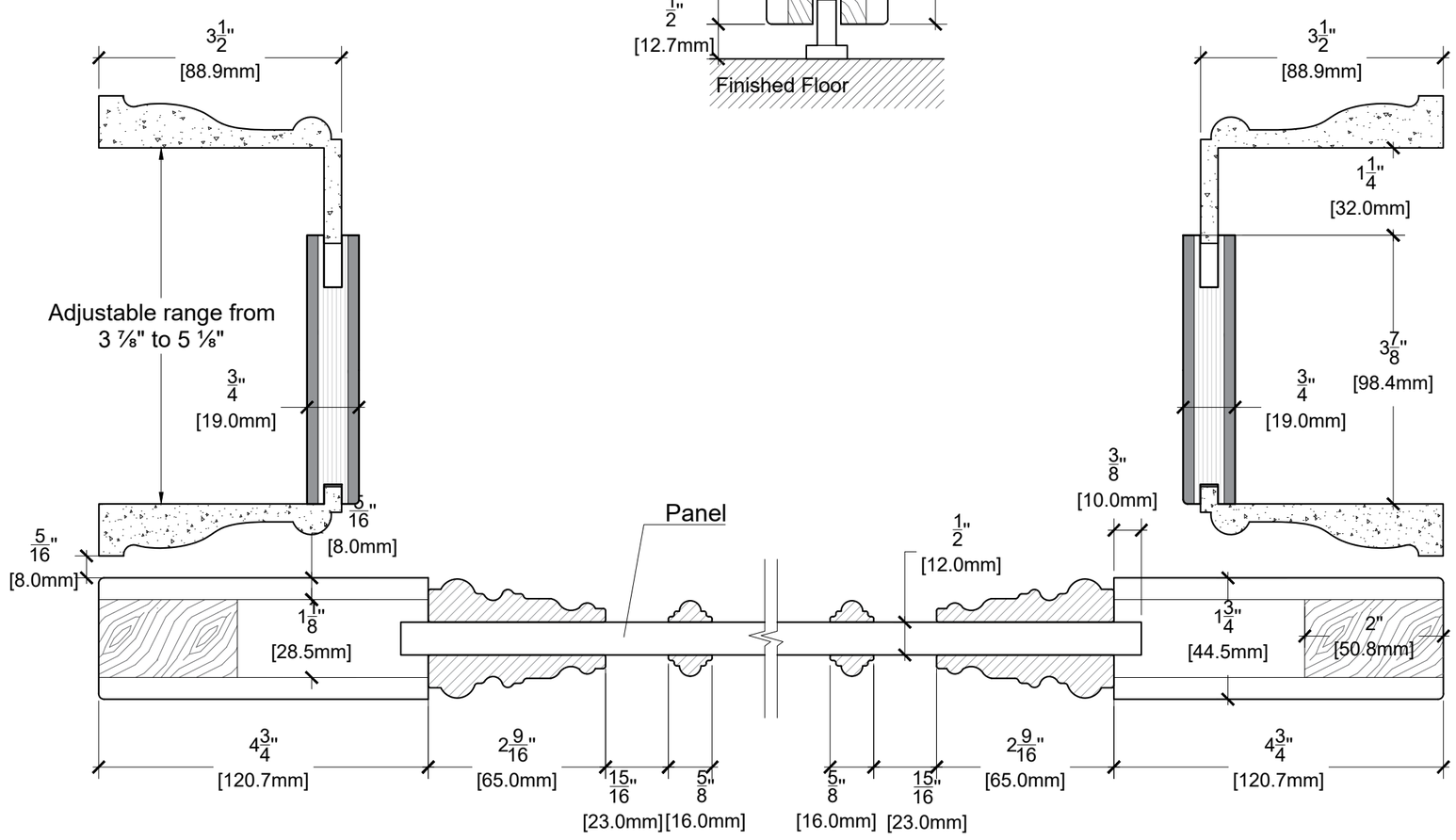

ALMES DOORS

Model: Palladio Tre Solid

Configuration: Barn 82"