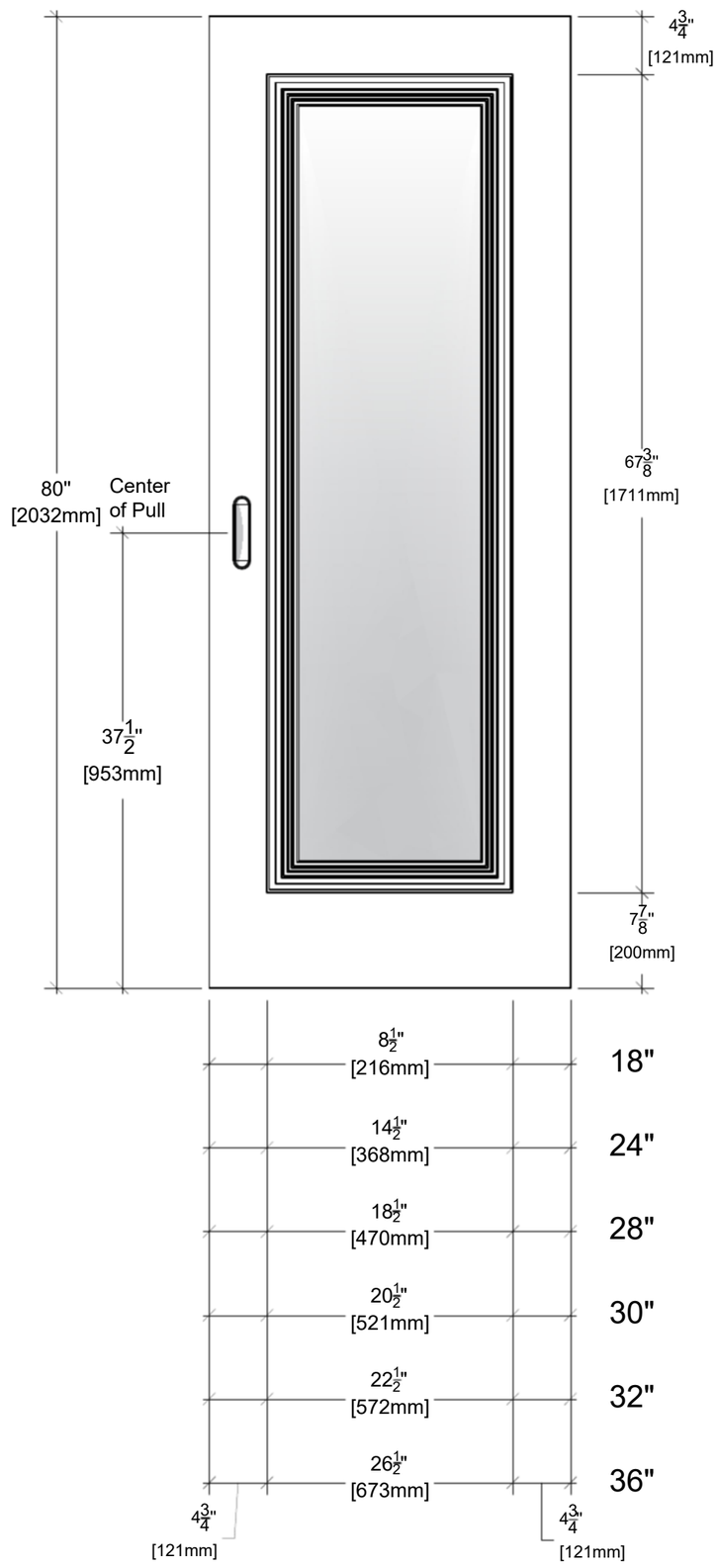

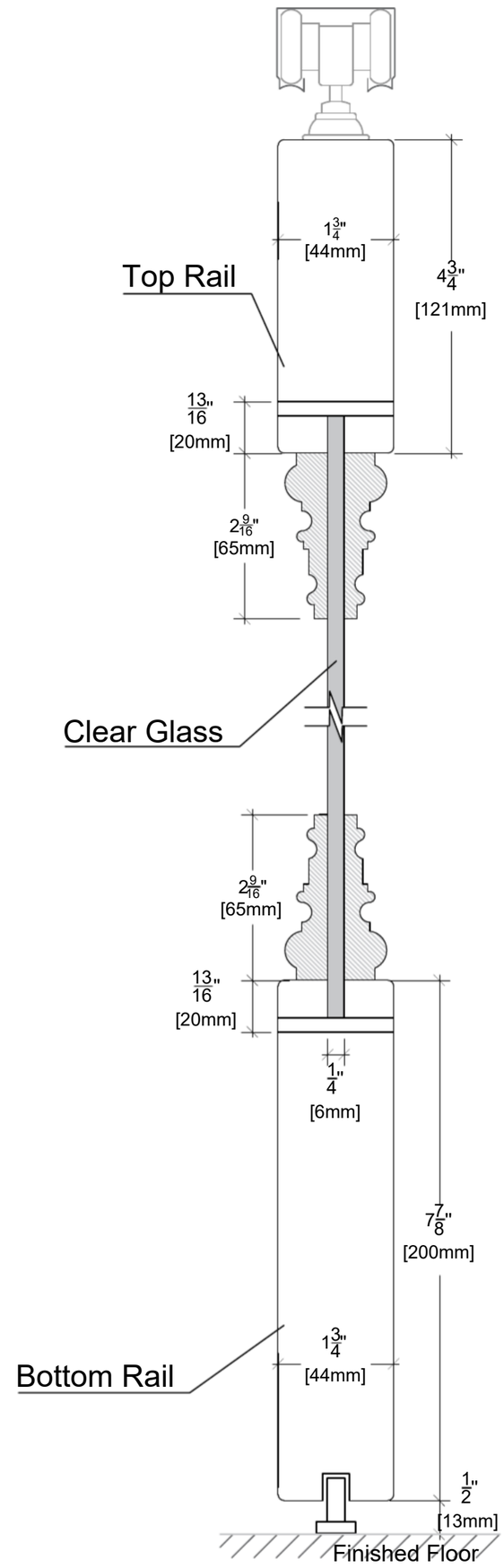

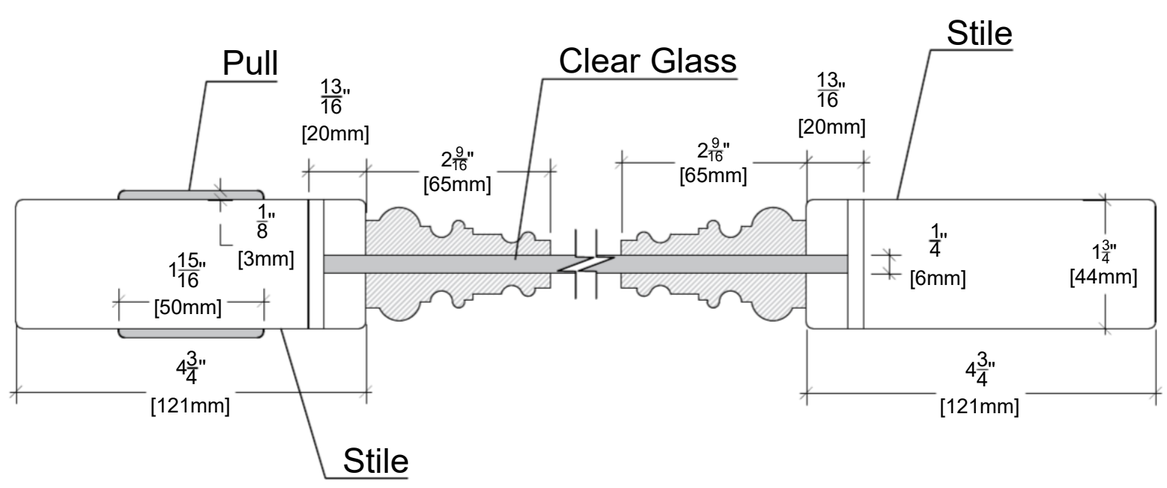

ALMES DOORS

Model: Palladio - Uno Clear Glass

Configuration: Pocket 80"