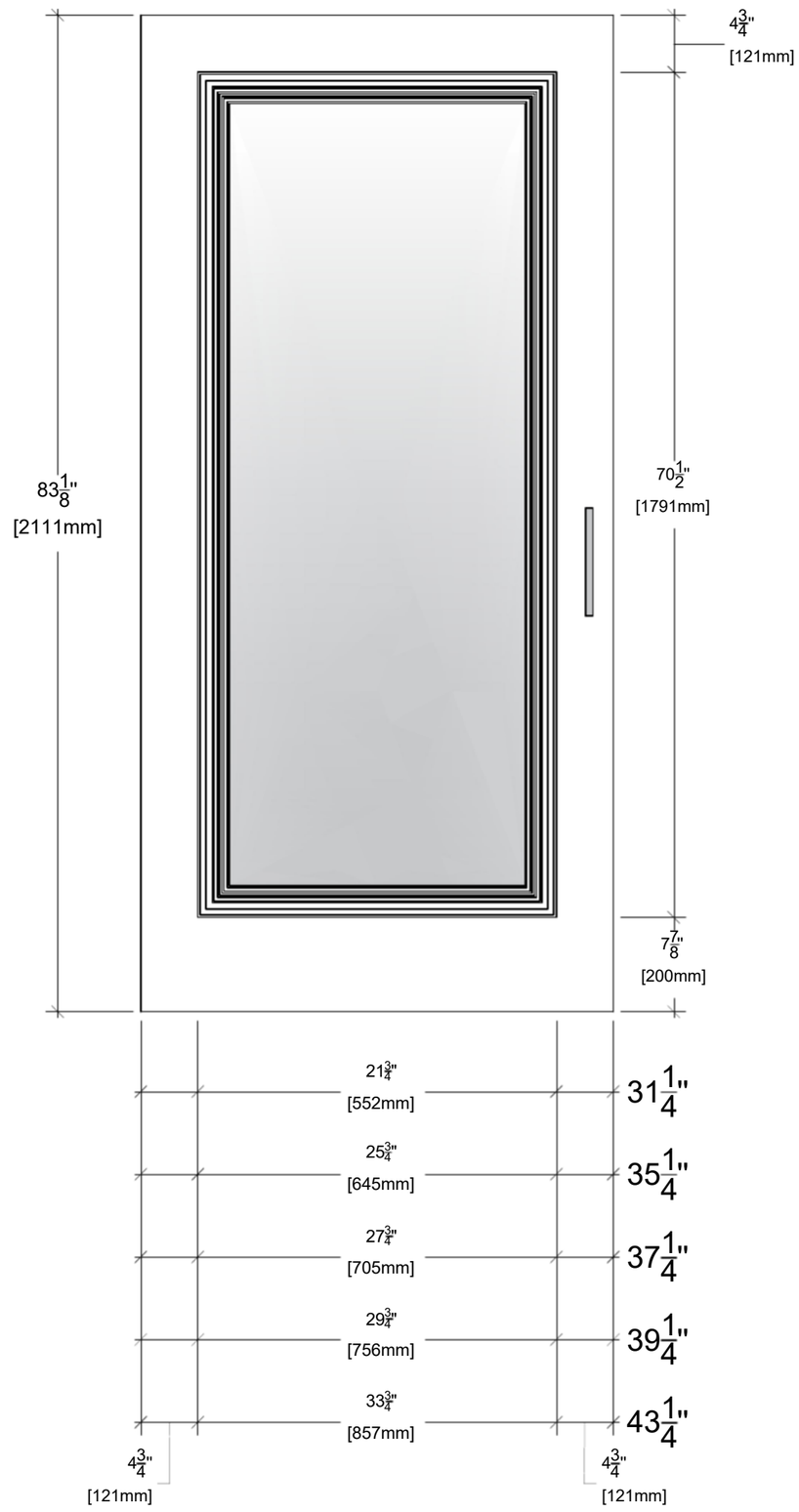

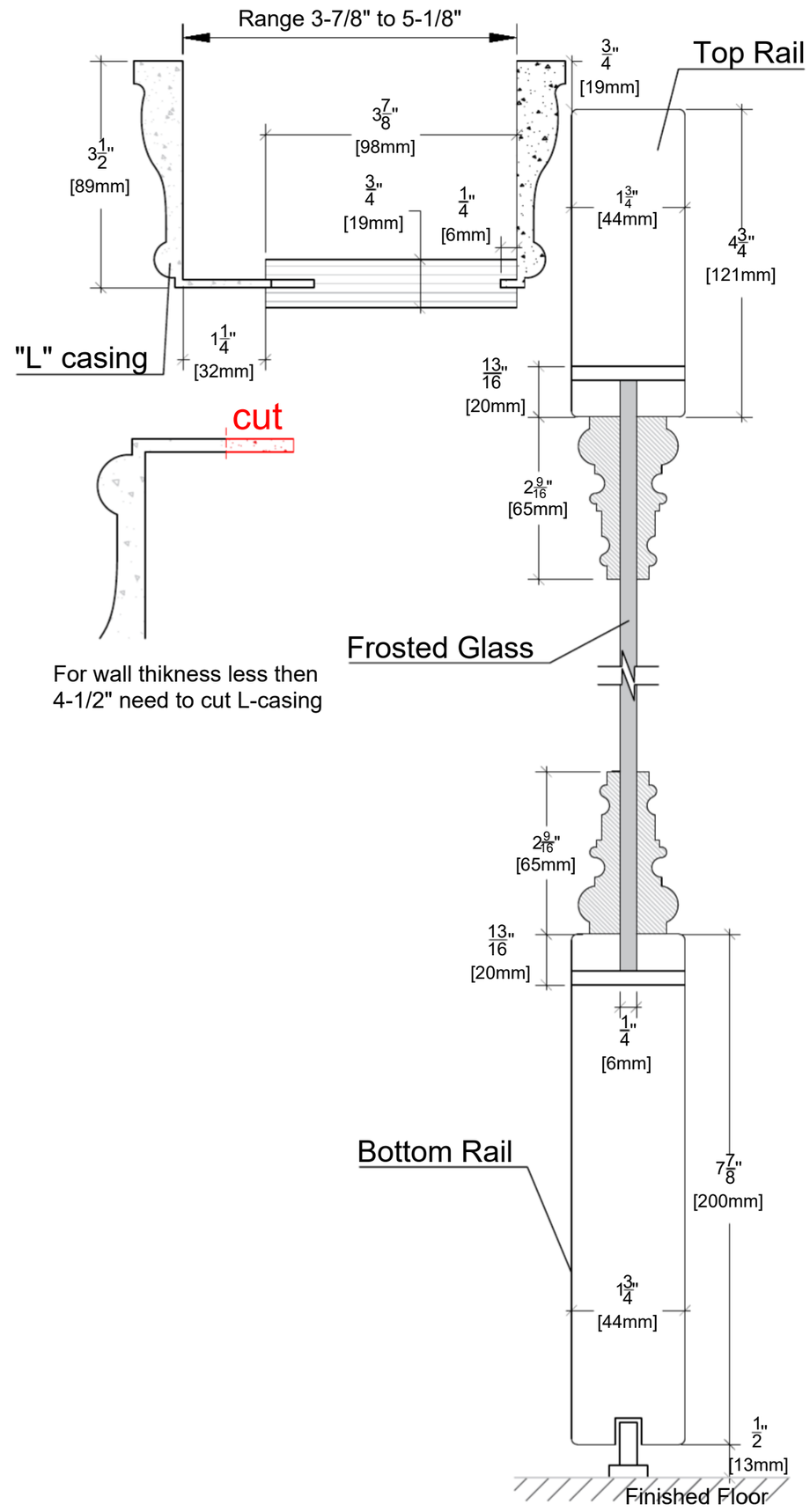

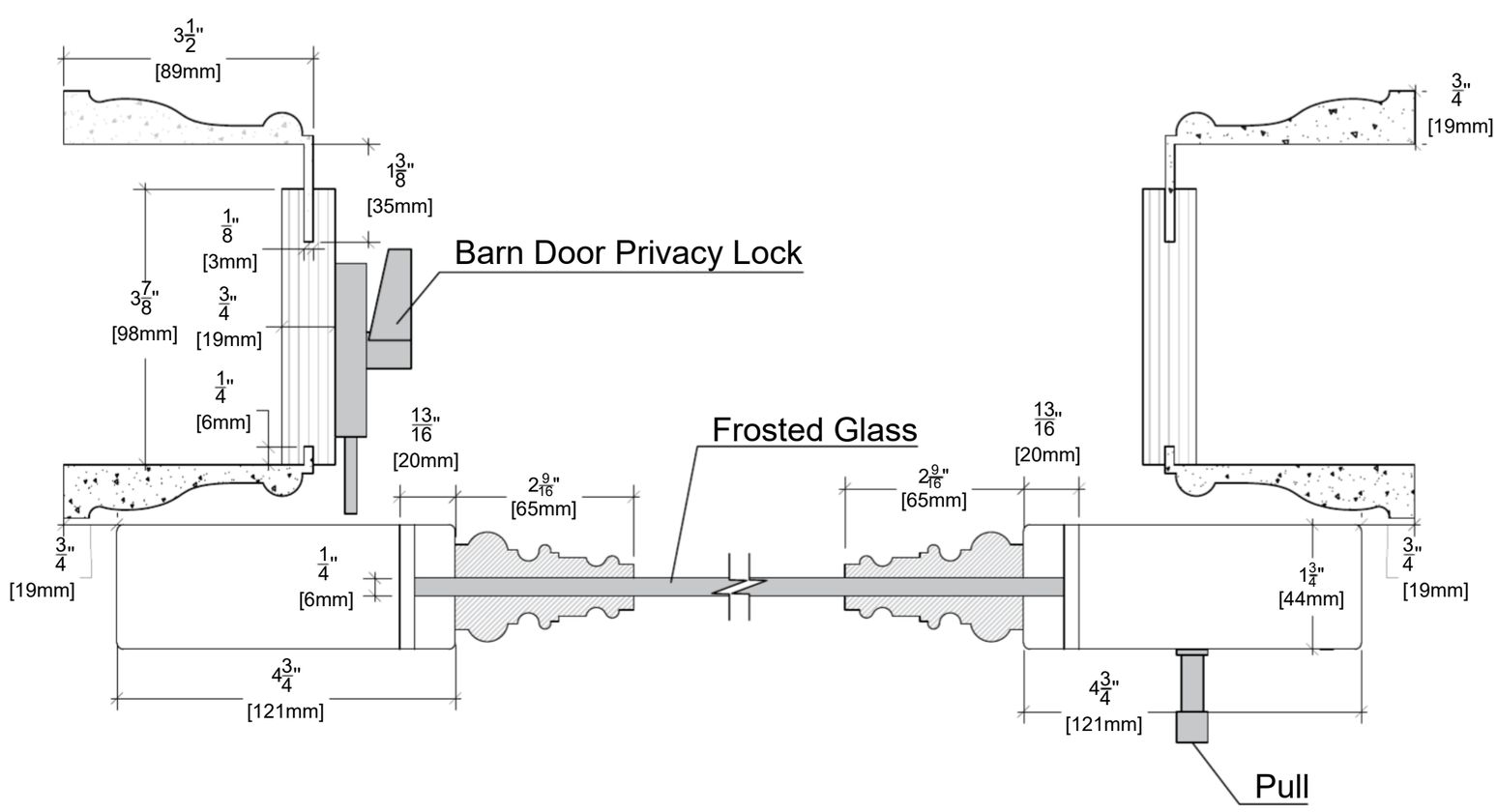

ALMES DOORS

Model: Palladio Uno Frosted Glass

Configuration: Barn 82"