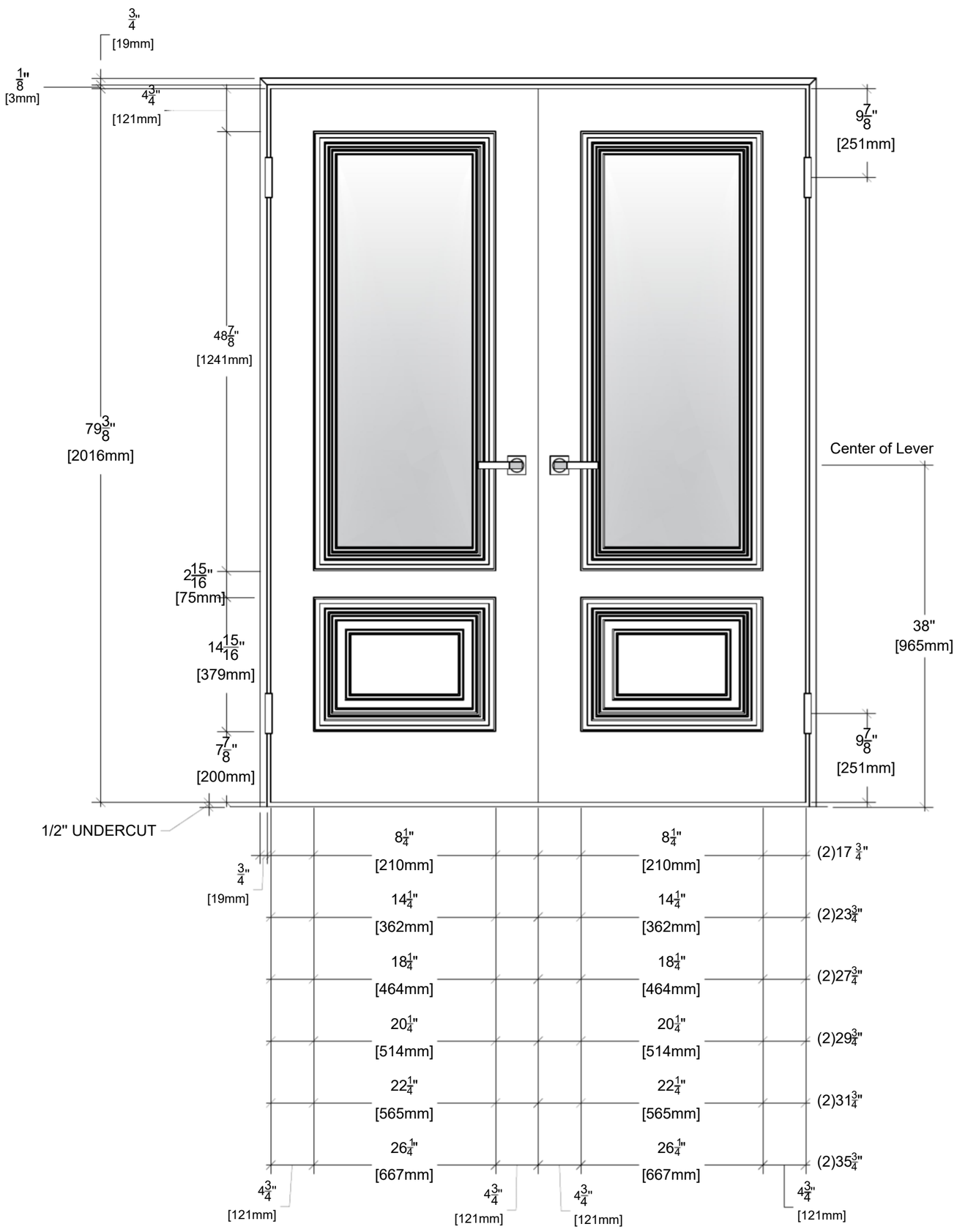

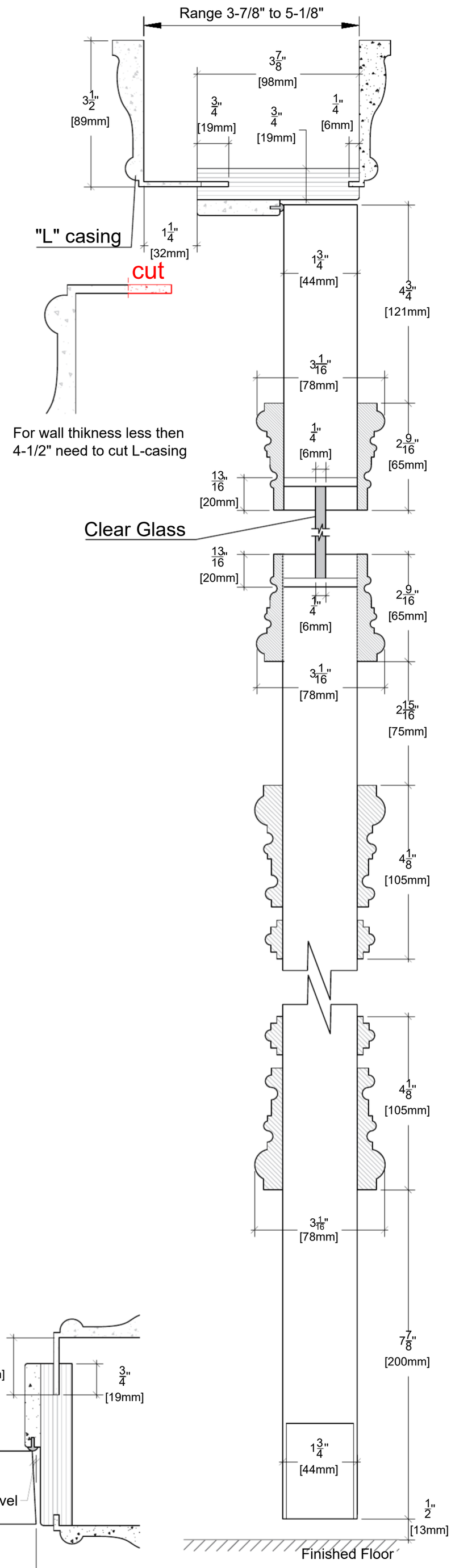

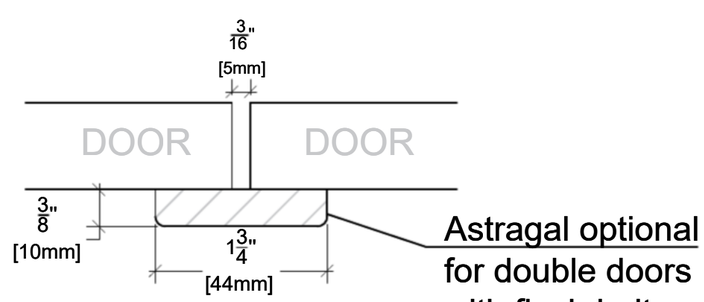

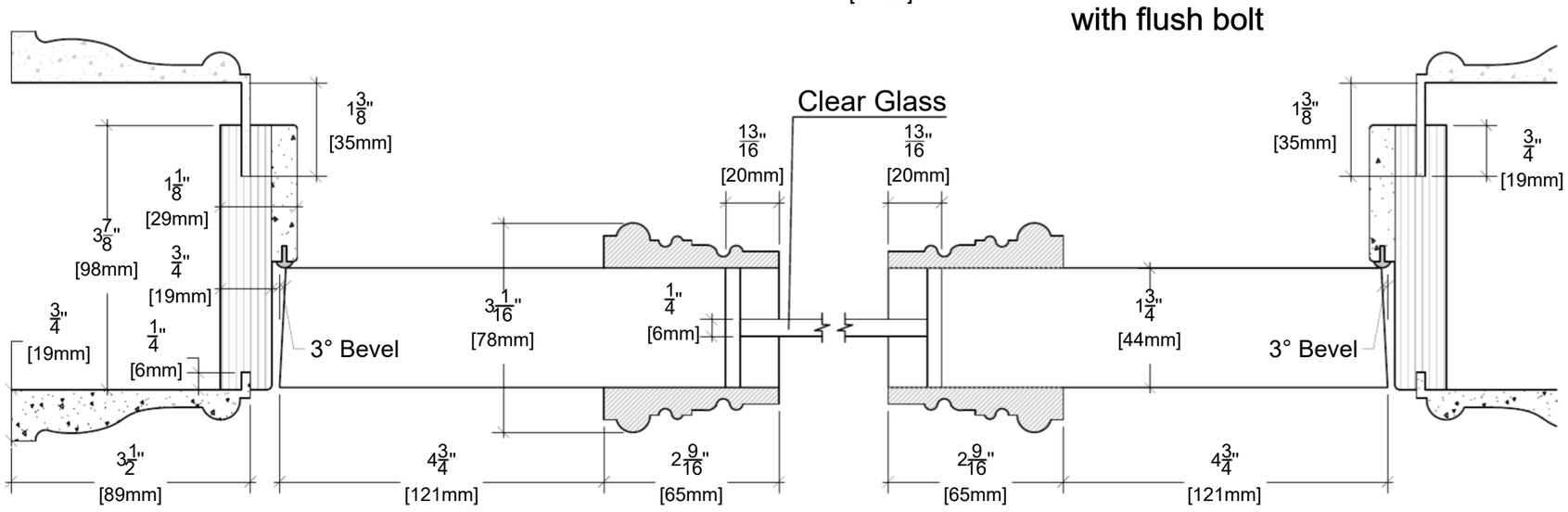

ALMES DOORS

Model: Palladio Due Clear Glass

Configuration: D Swing 80"