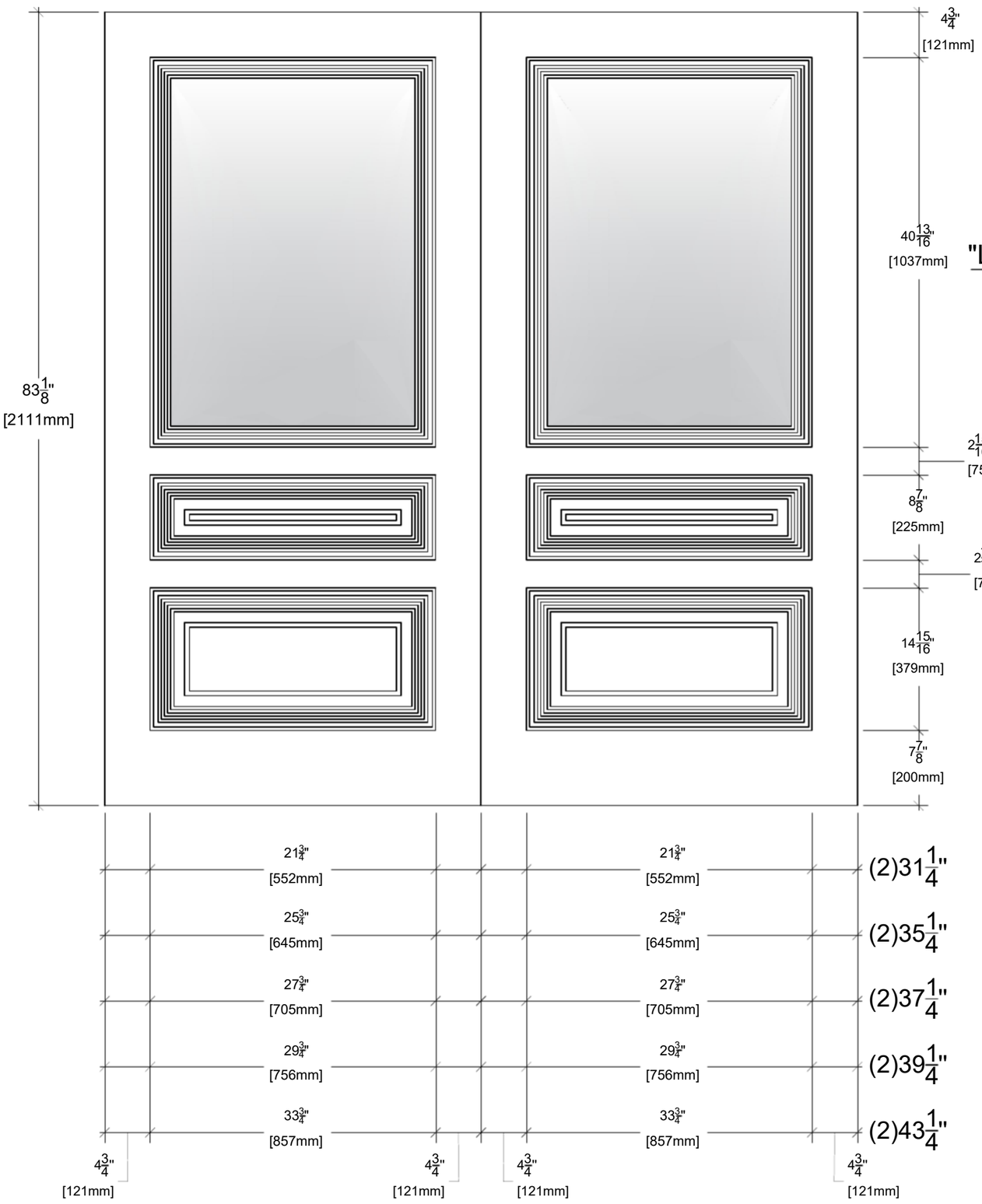

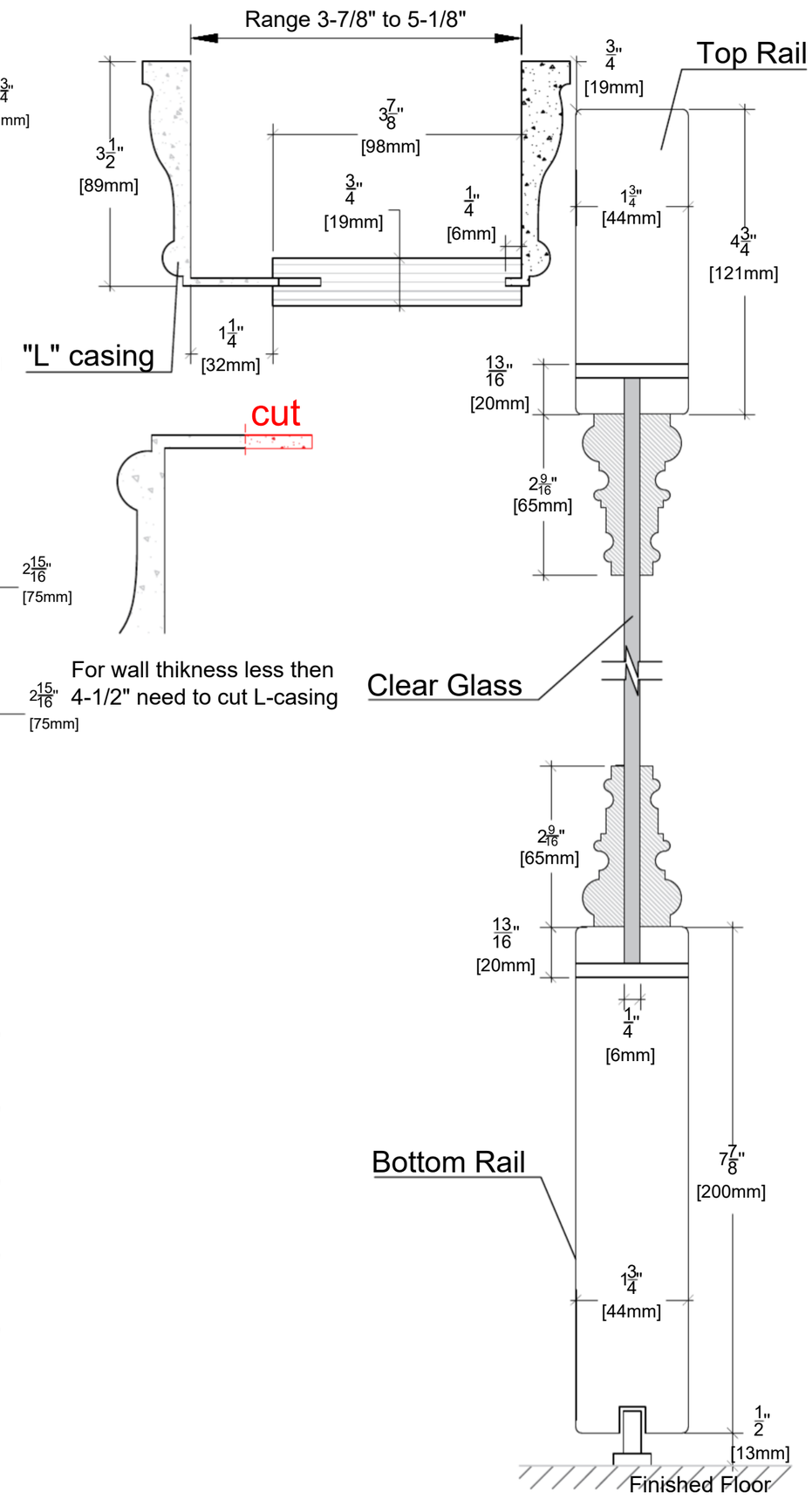

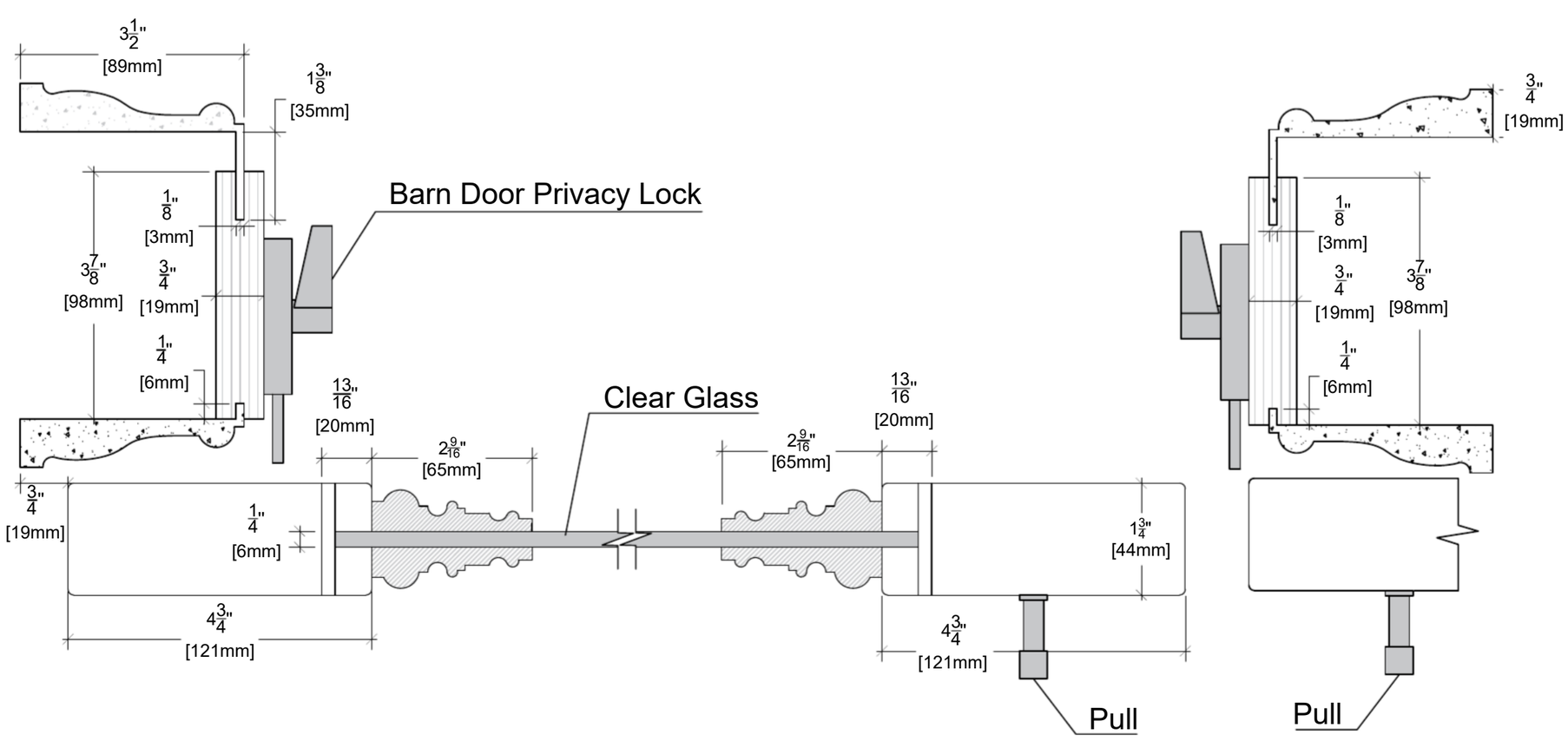

ALMES DOORS

Model: Palladio Tre - Clear Glass

Configuration: D Barn 82"