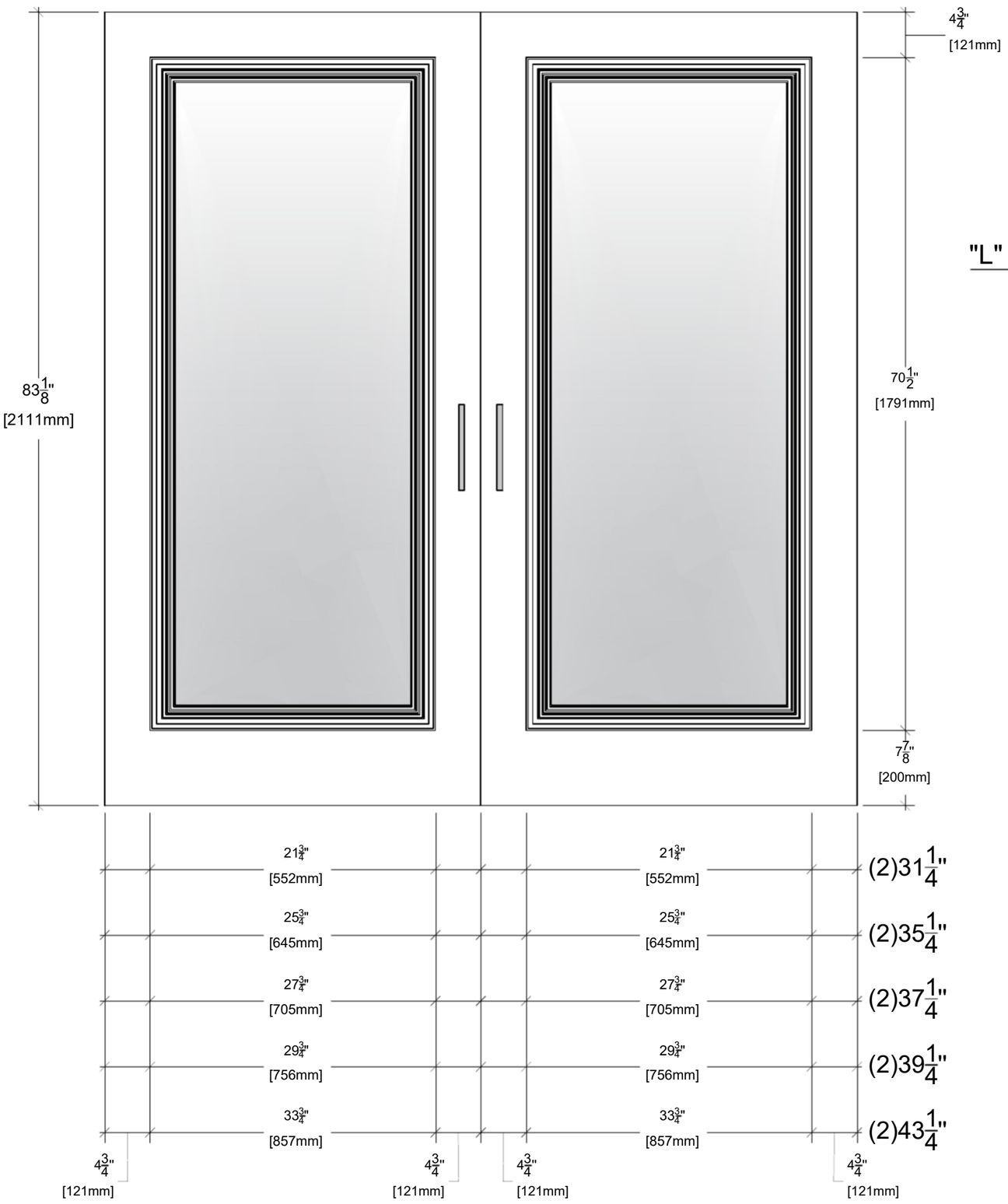

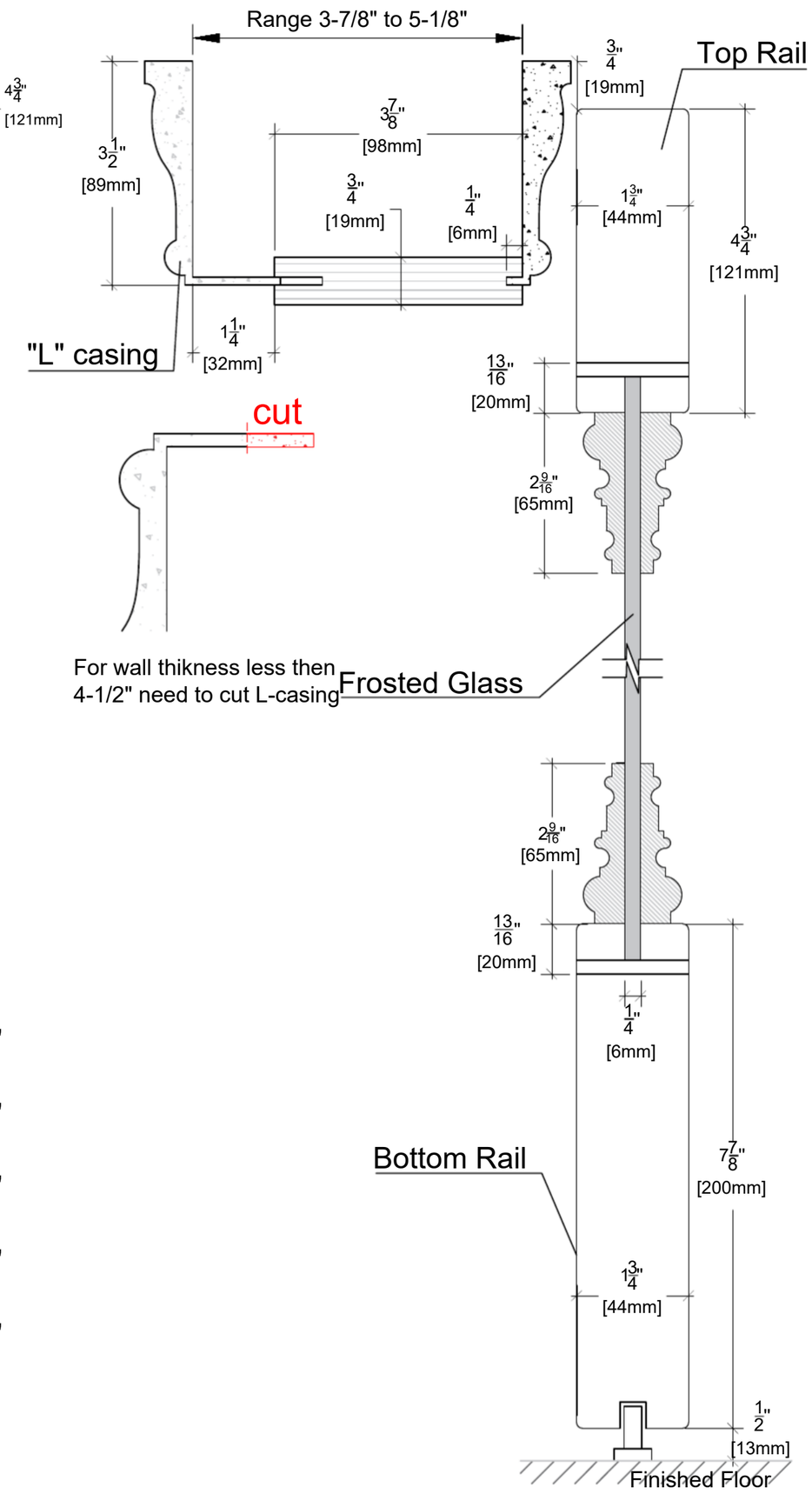

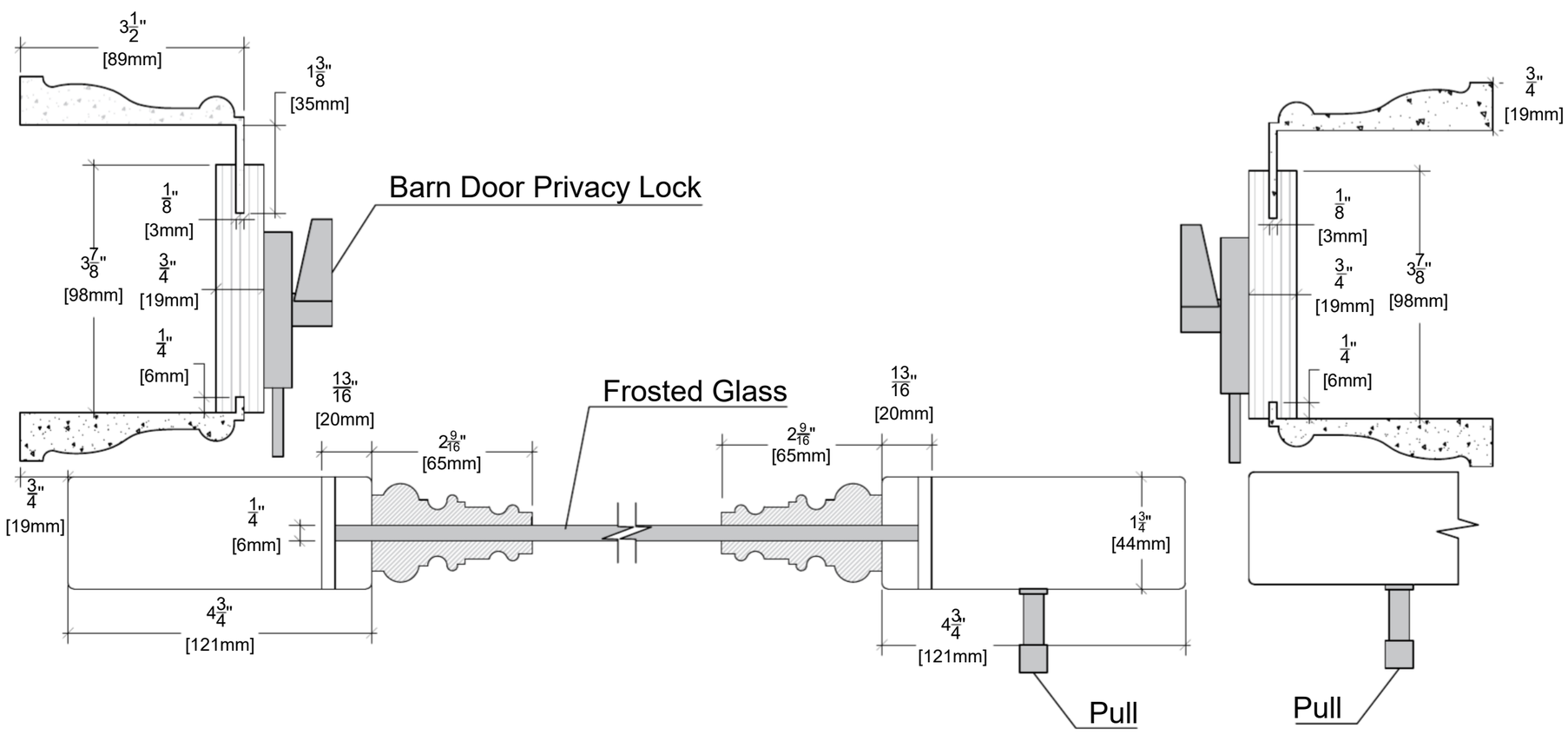

ALMES DOORS

Model: Palladio Uno Frosted Glass

Configuration: D Barn 82"