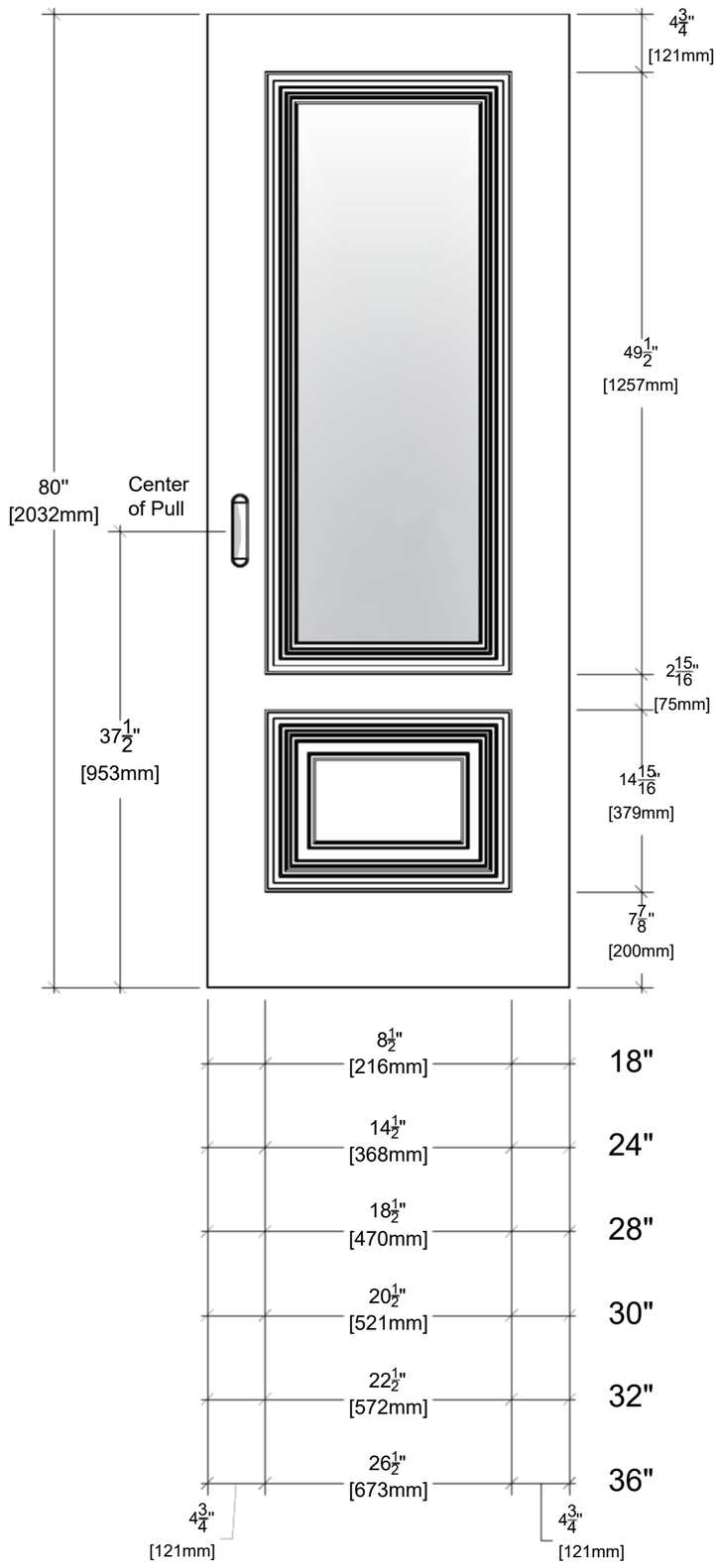

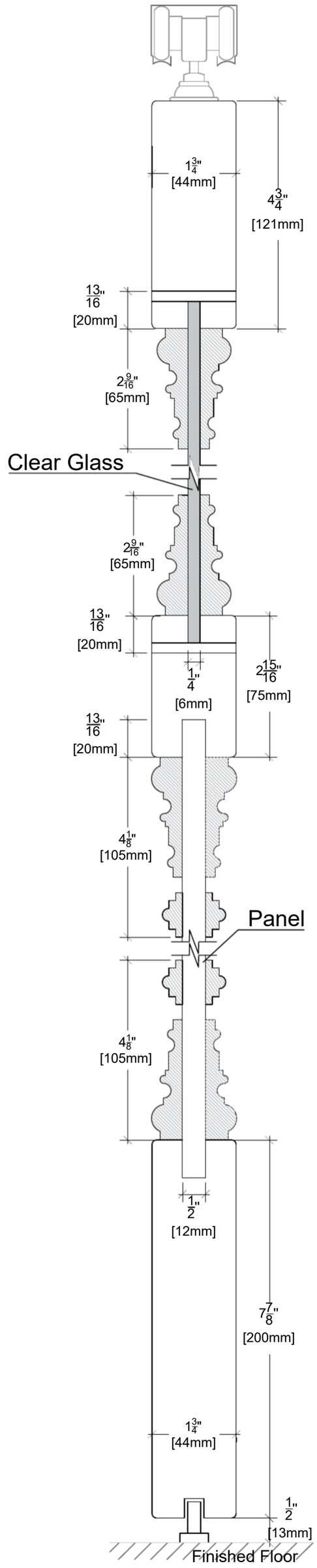

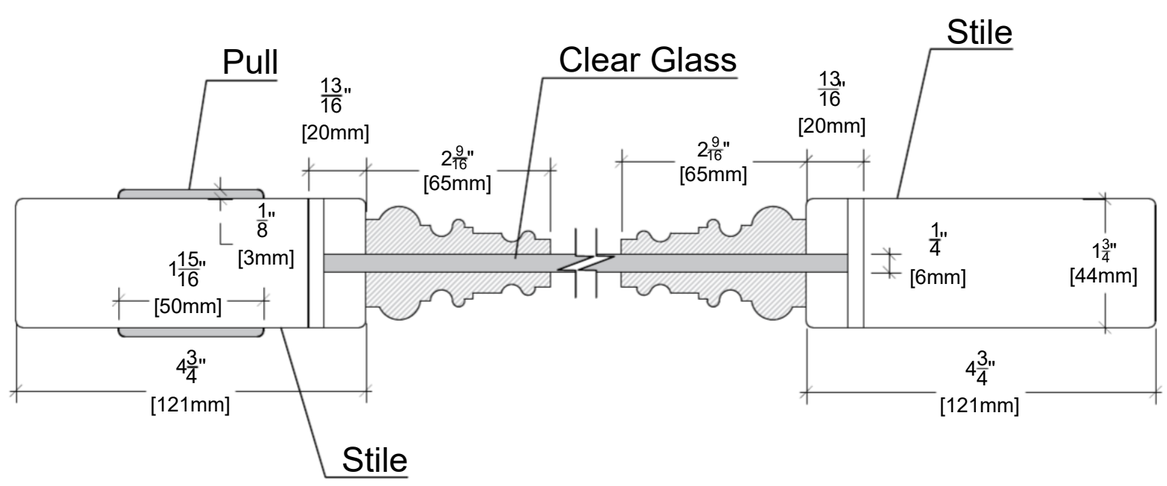

ALMES DOORS

Model: Palladio - Due Clear Glass

Configuration: Pocket 80"