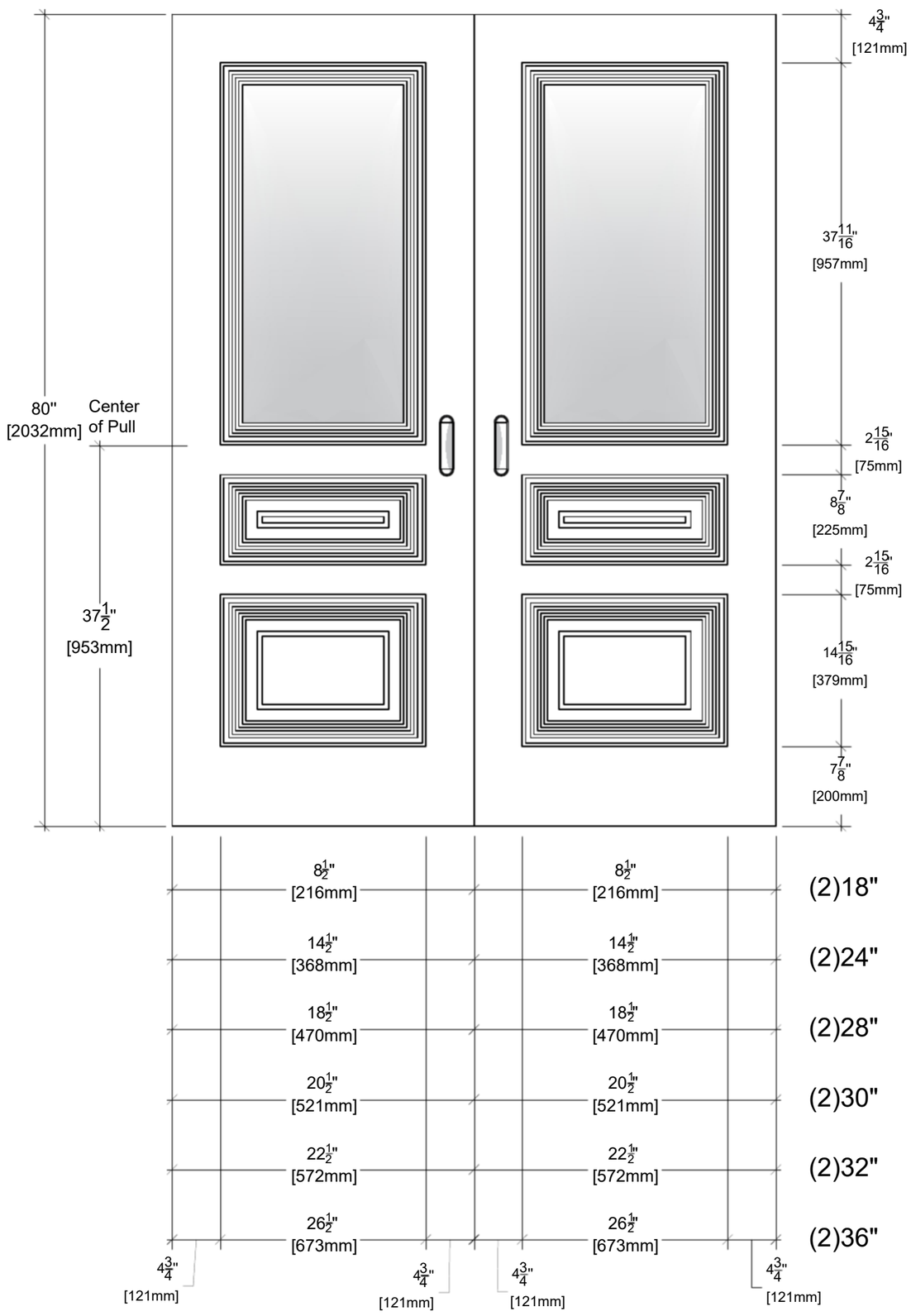

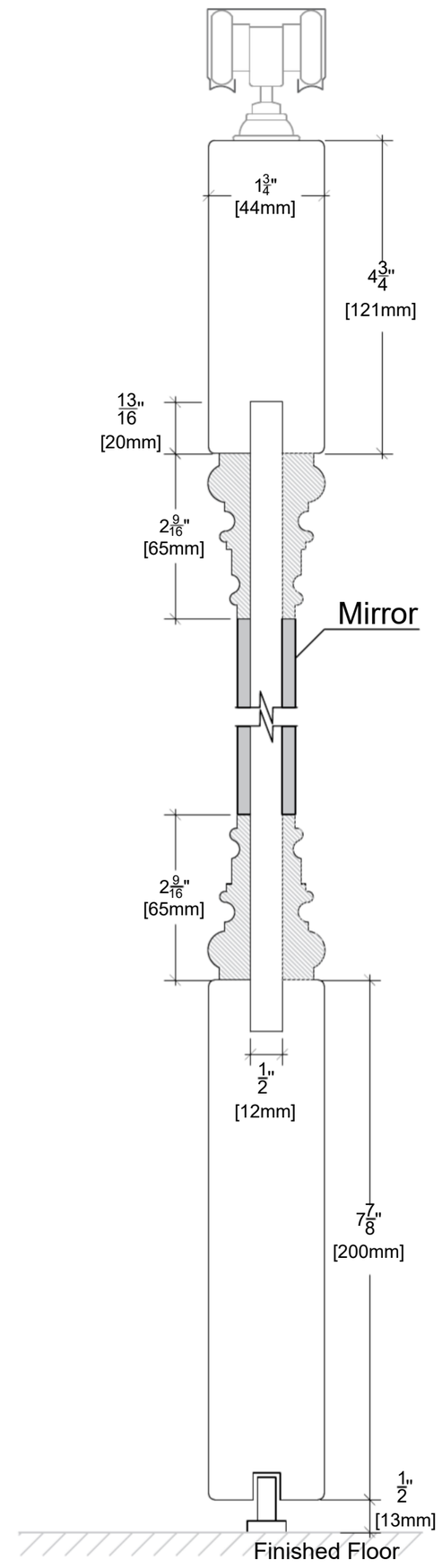

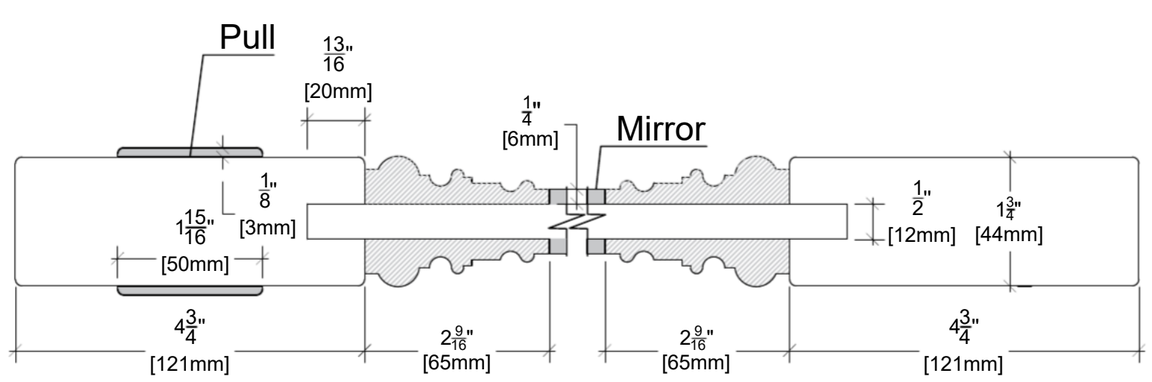

ALMES DOORS

Model: Palladio - Tre Mirror

Configuration: D Pocket 80"