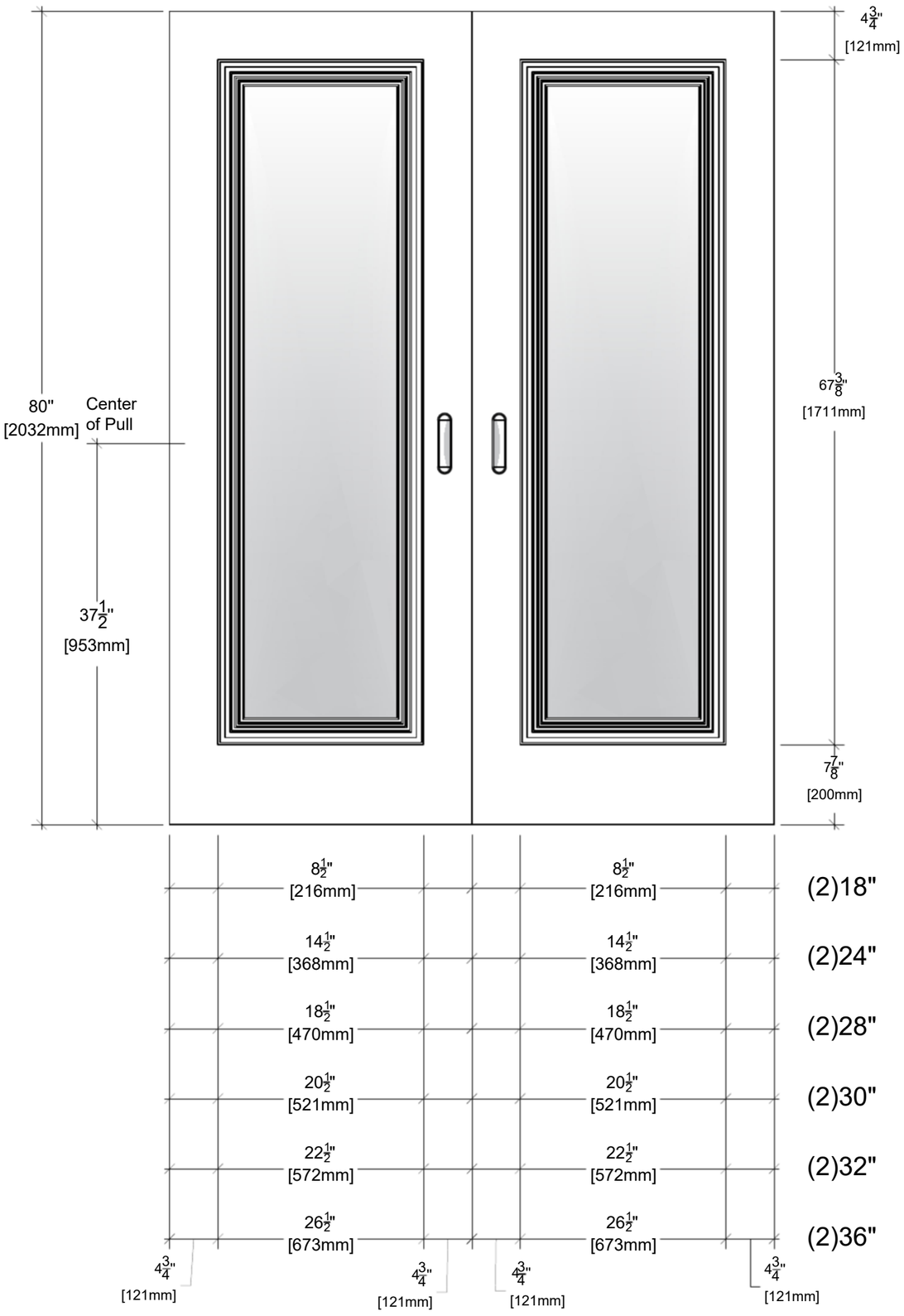

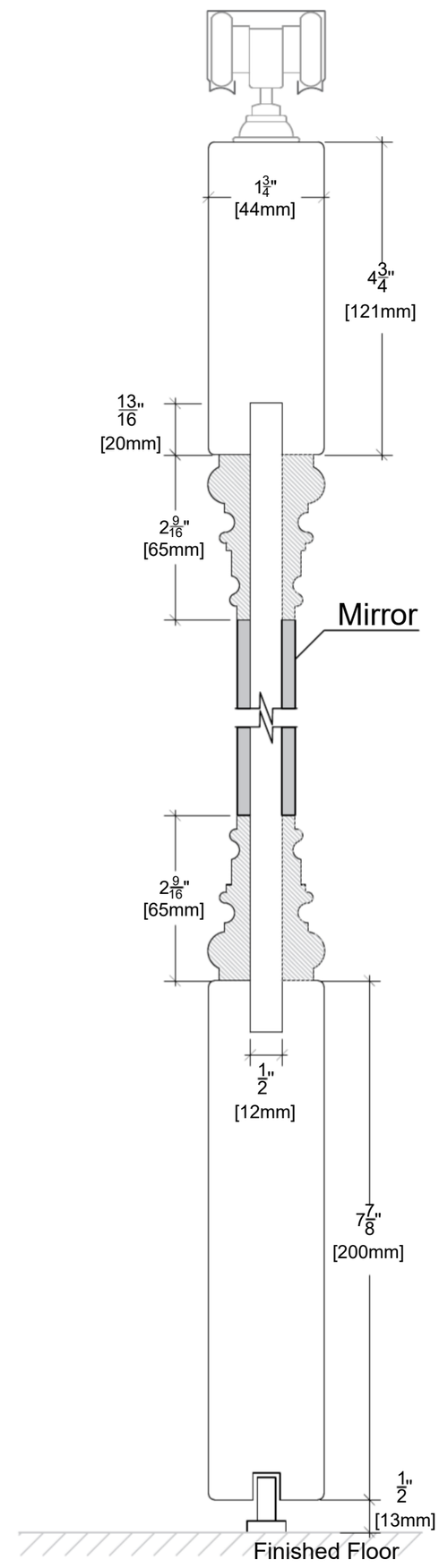

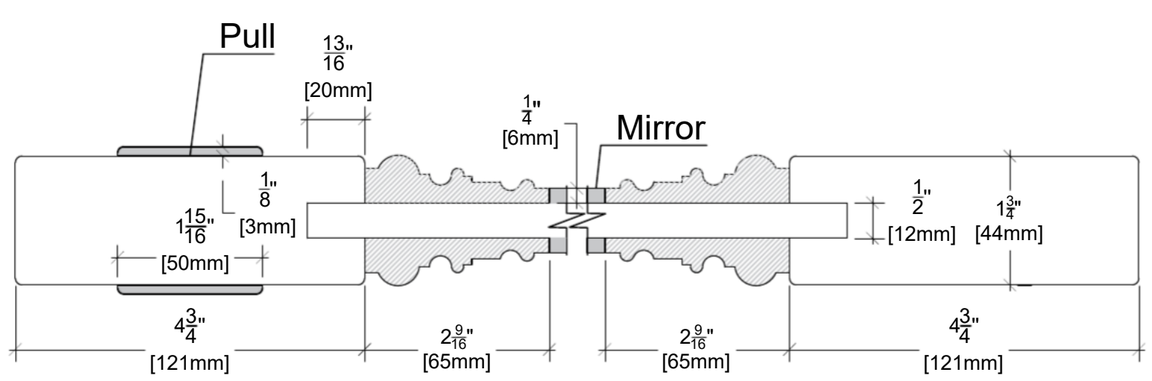

ALMES DOORS

Model: Palladio - Uno Mirror

Configuration: D Pocket 80"