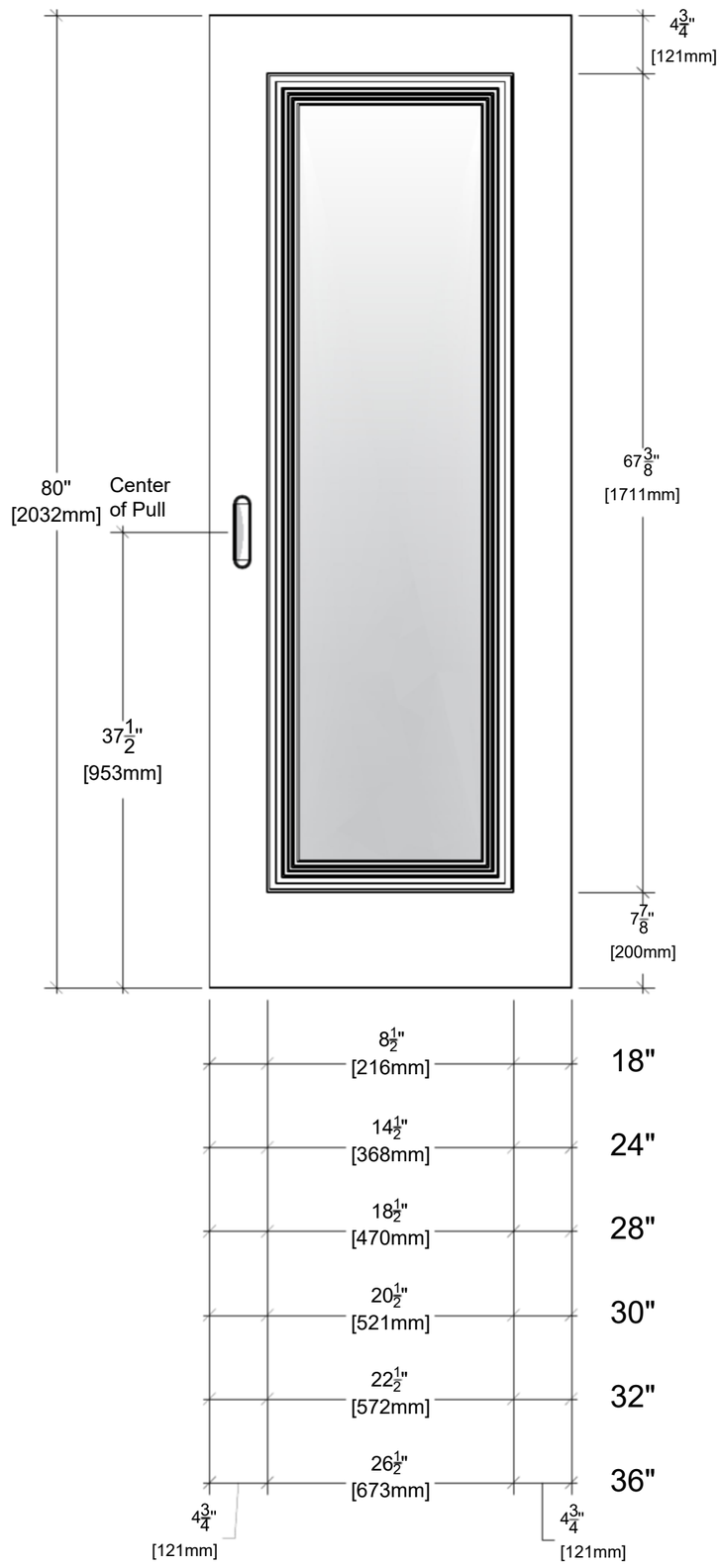

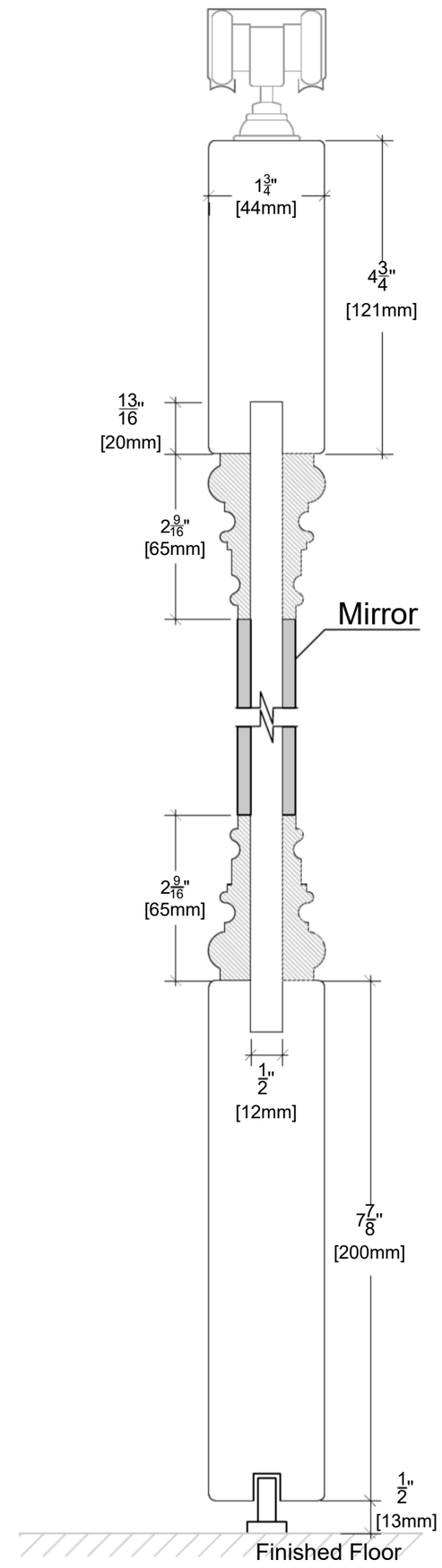

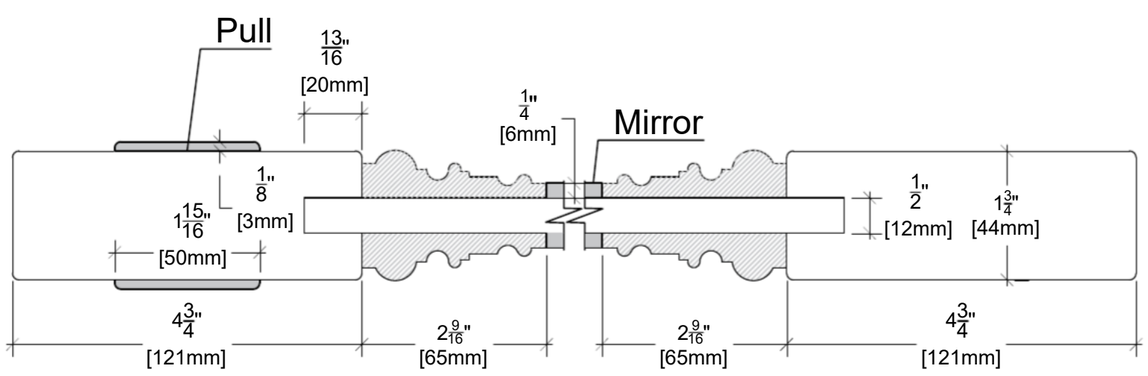

ALMES DOORS

Model: Palladio - Uno Mirror

Configuration: Pocket 80"