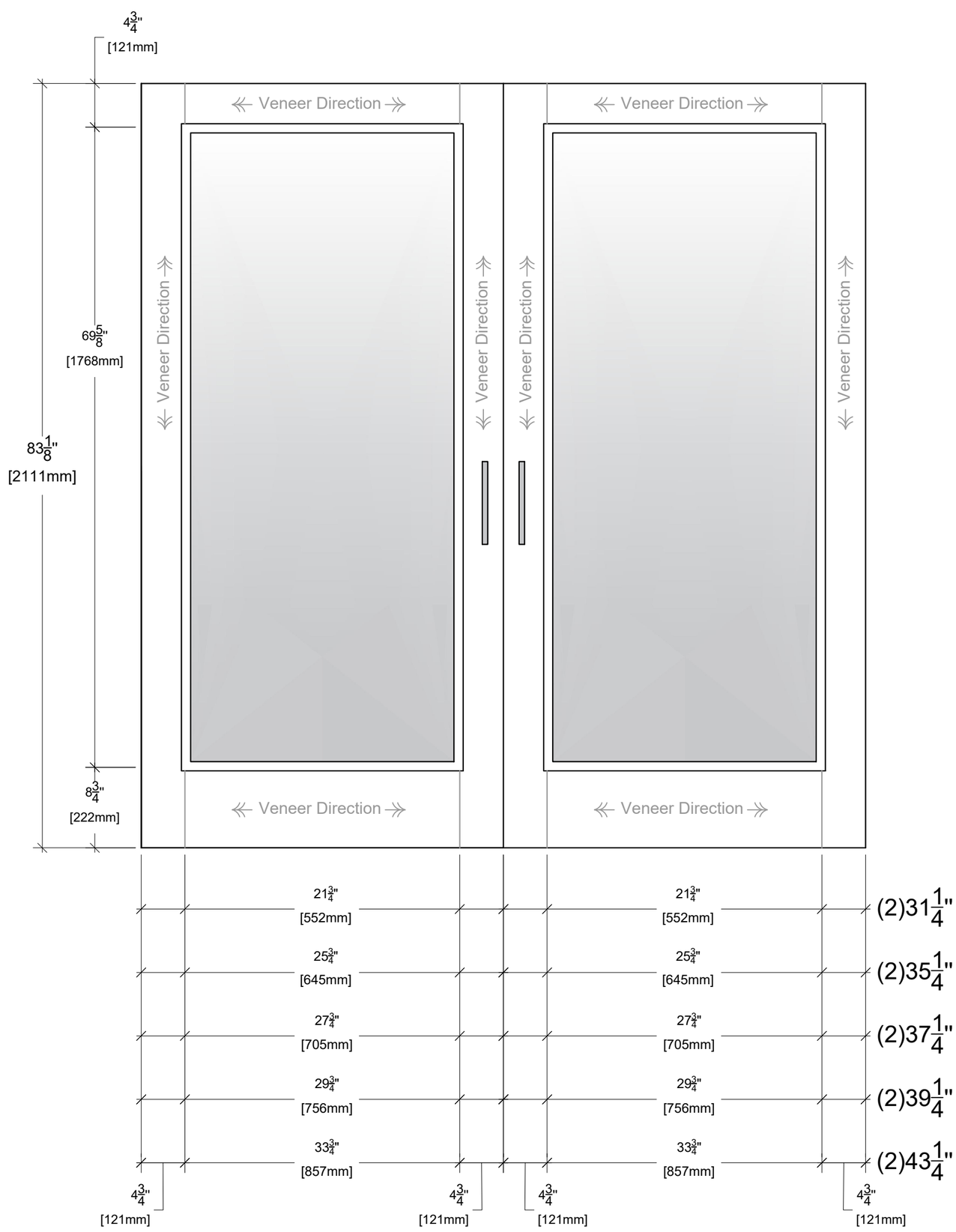

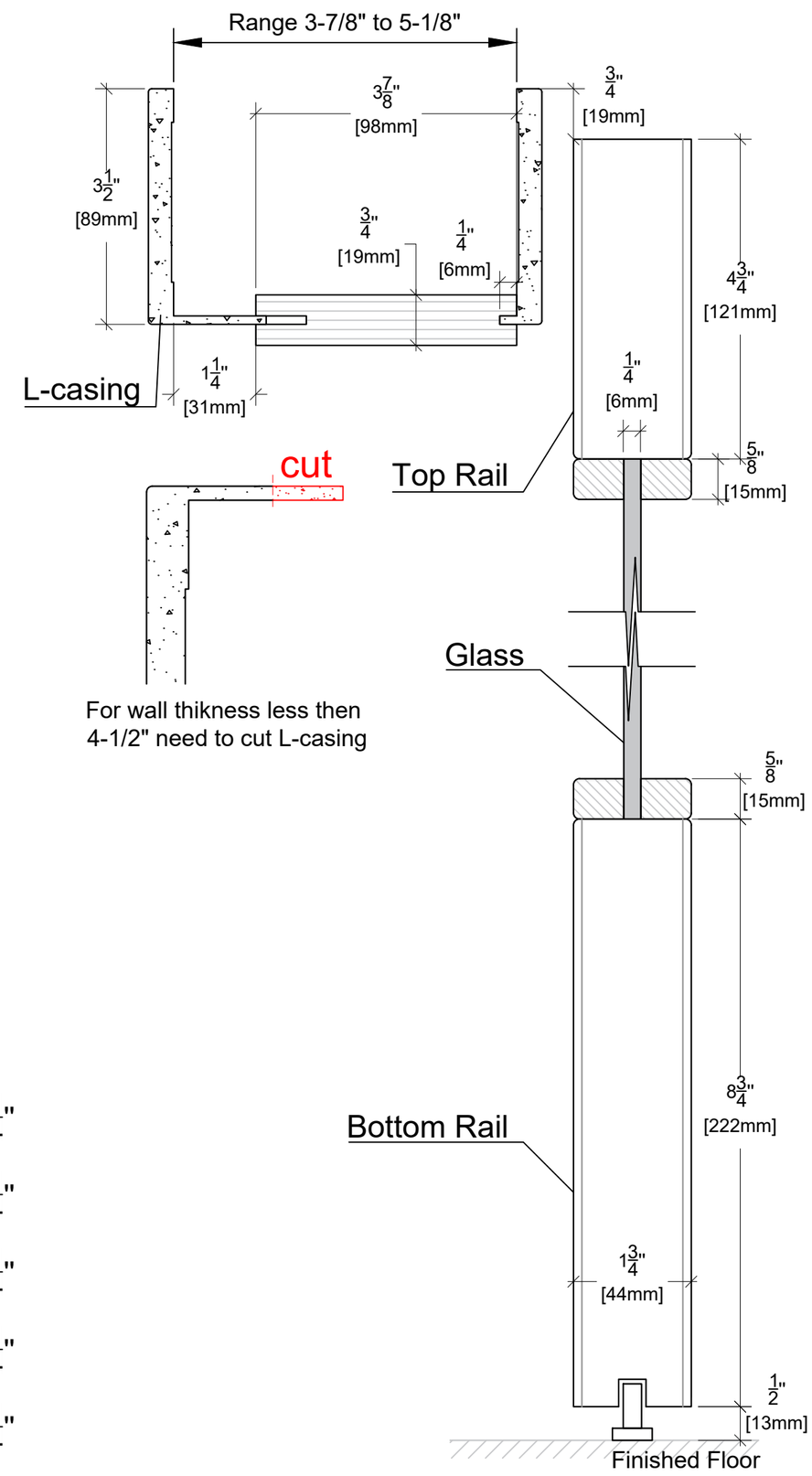

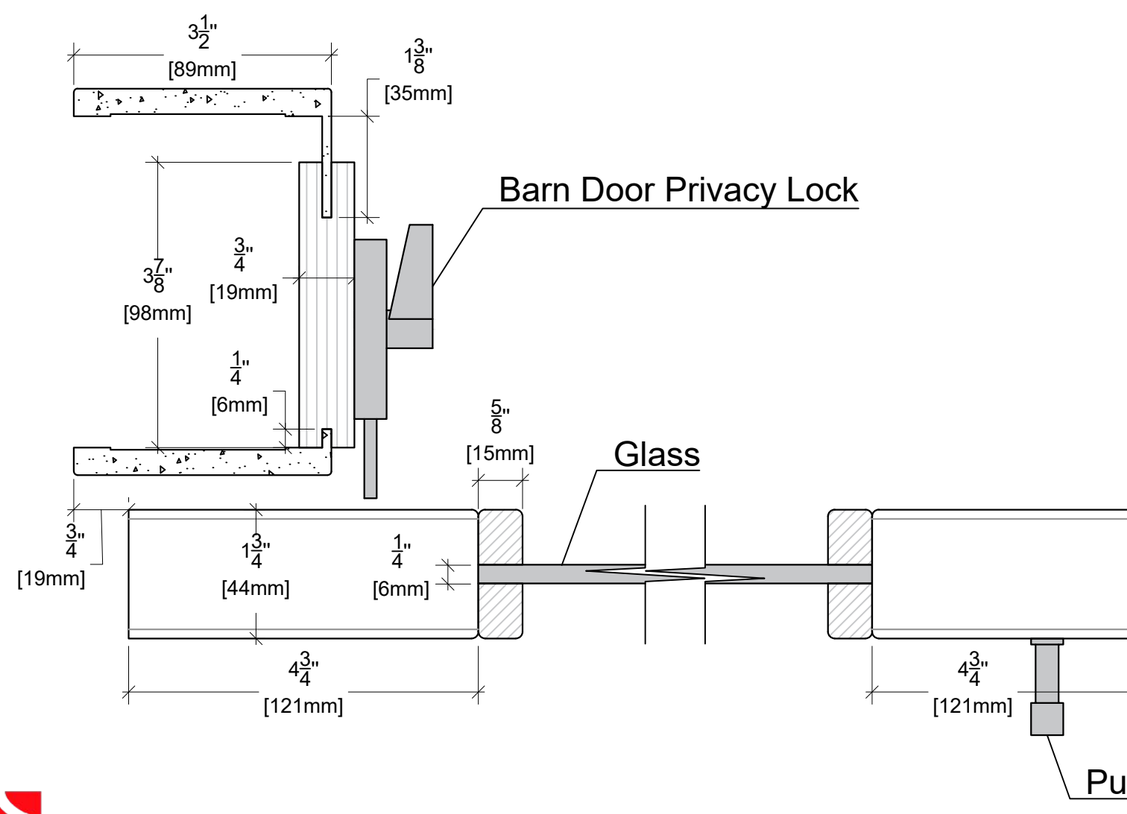

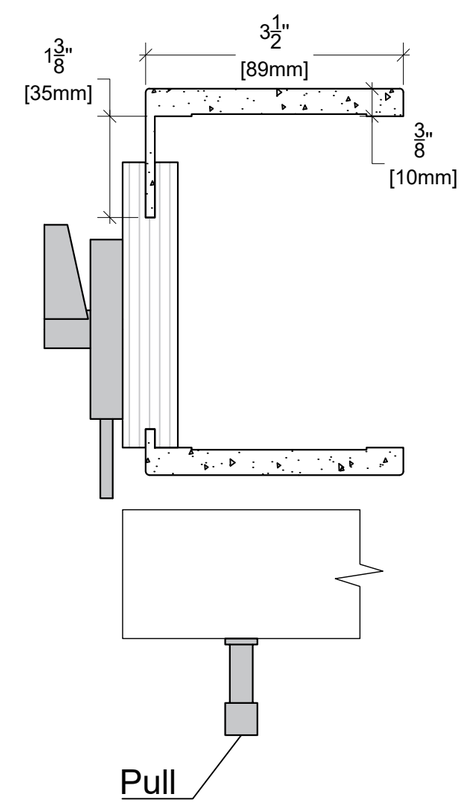

ALMES DOORS

Model: Semplicita- Palermo La Luce

Configuration: D Barn 82"