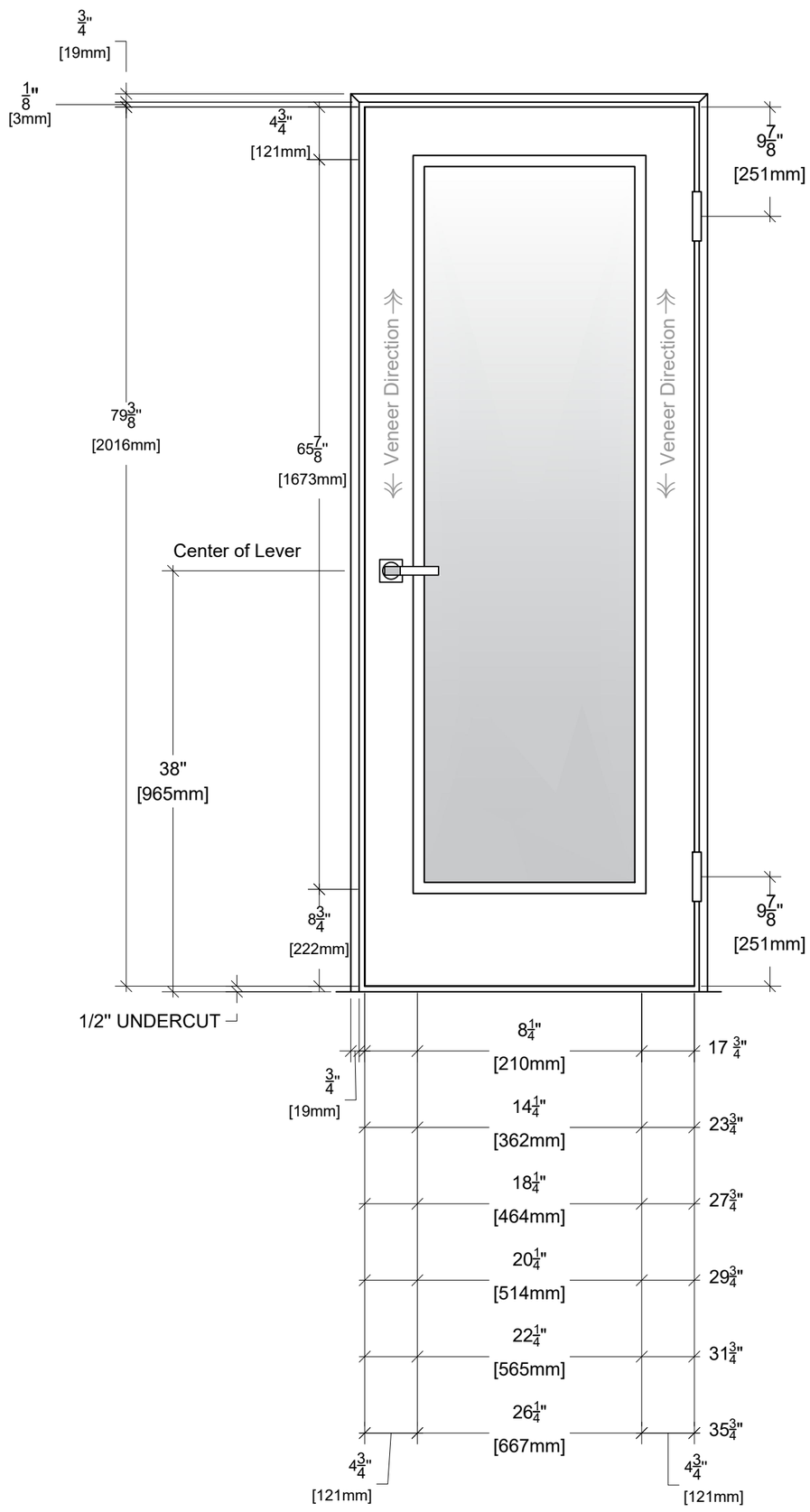

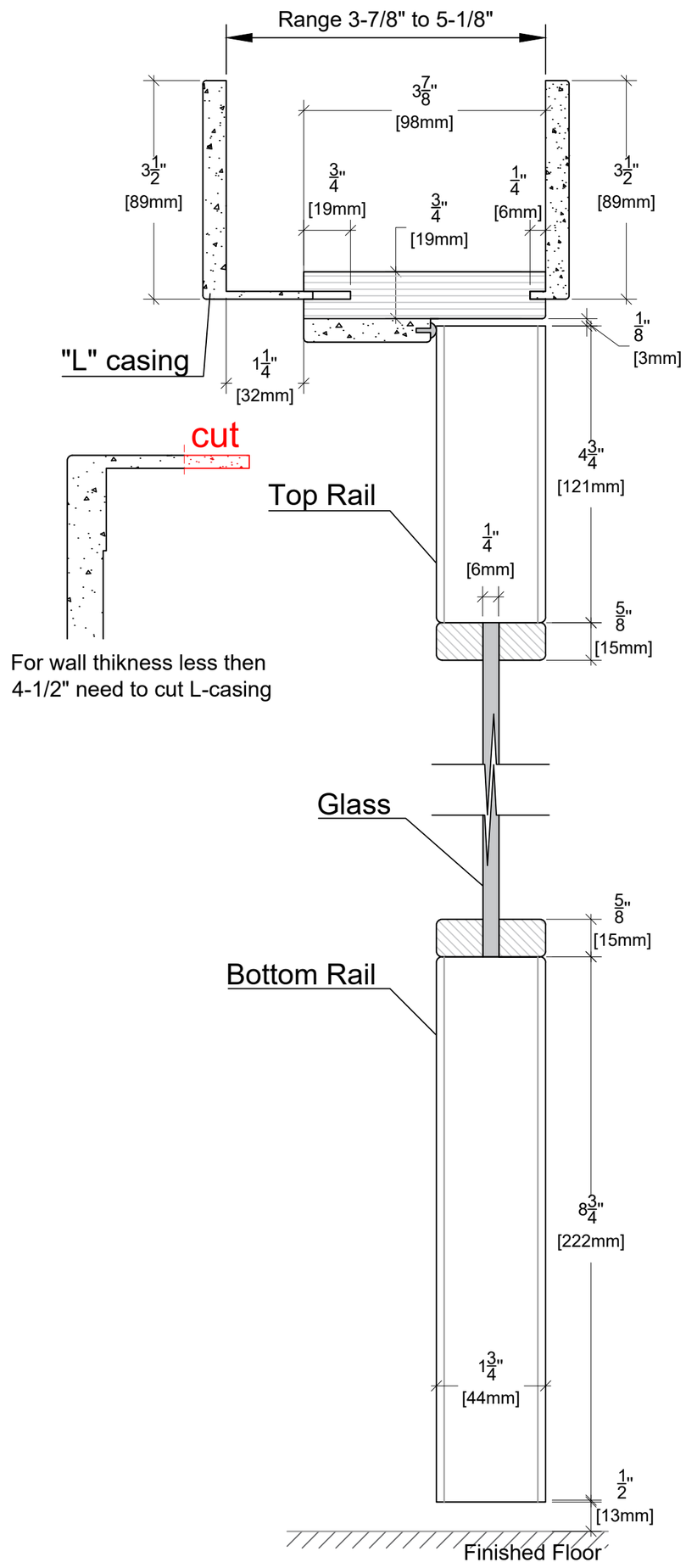

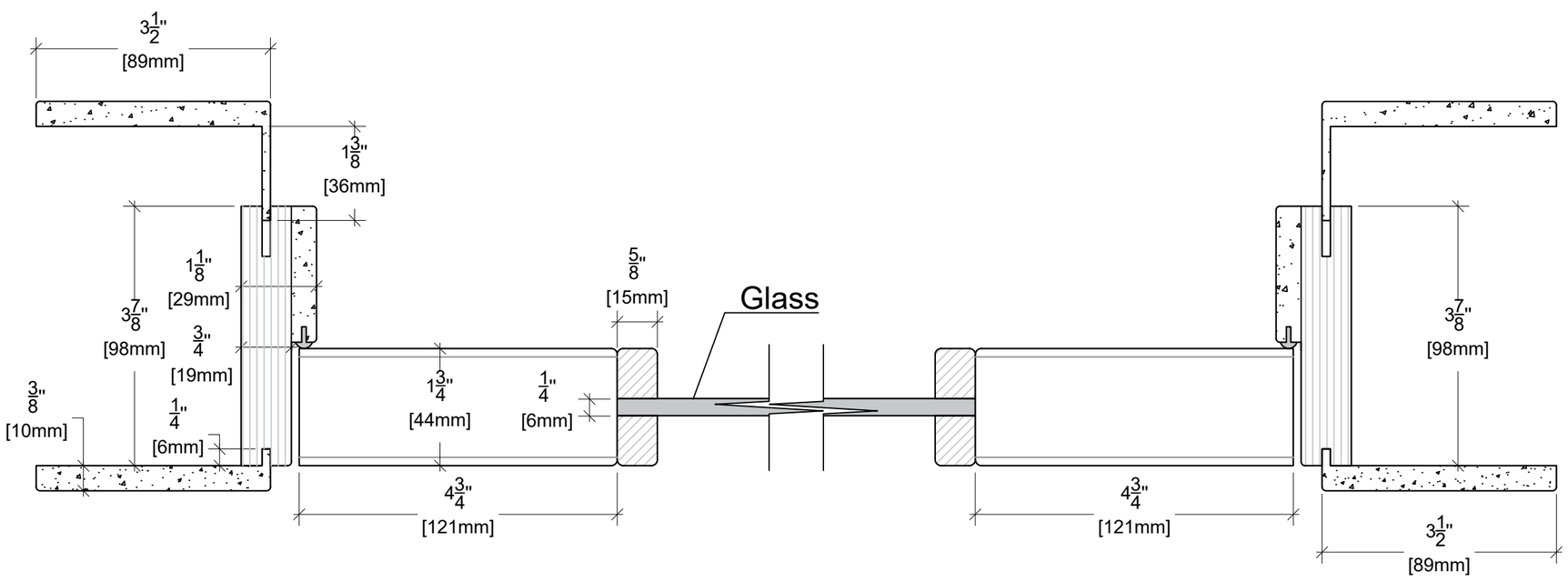

ALMES DOORS

Model: Semplicita- Elivia Vertical Wood Grain La Luce

Configuration: Swing 80"