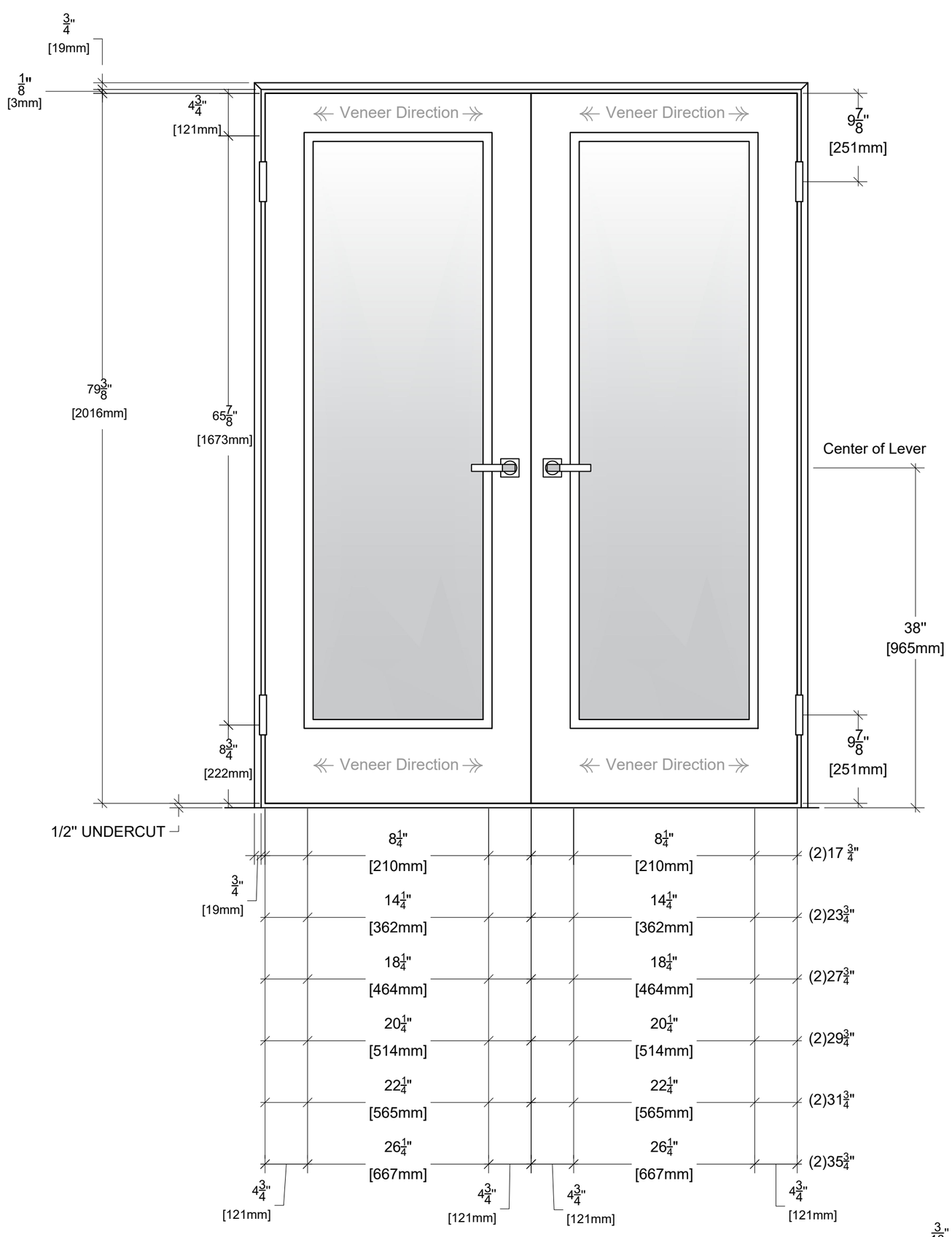

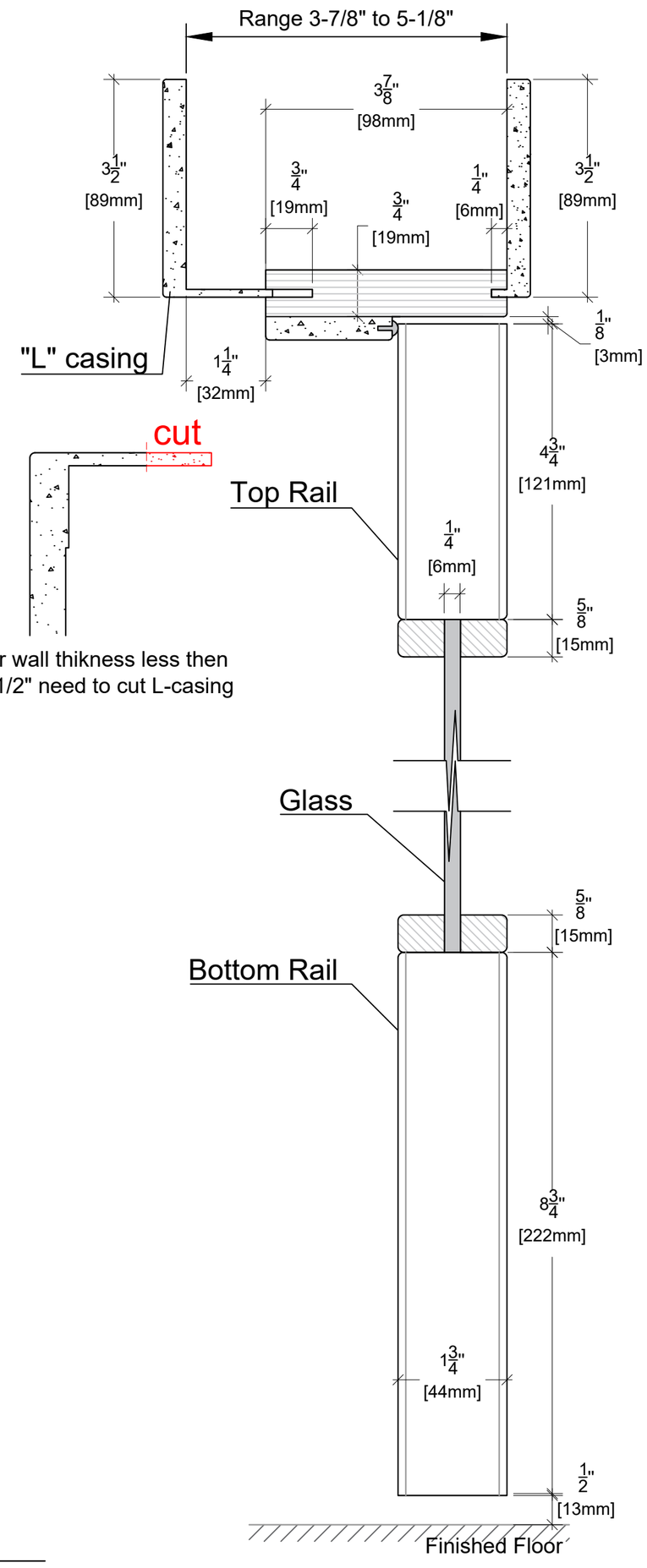

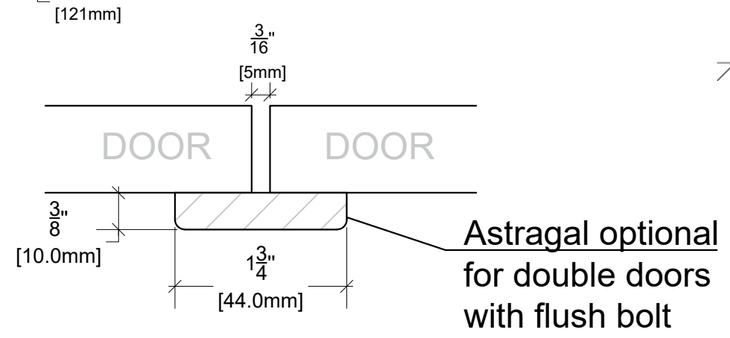

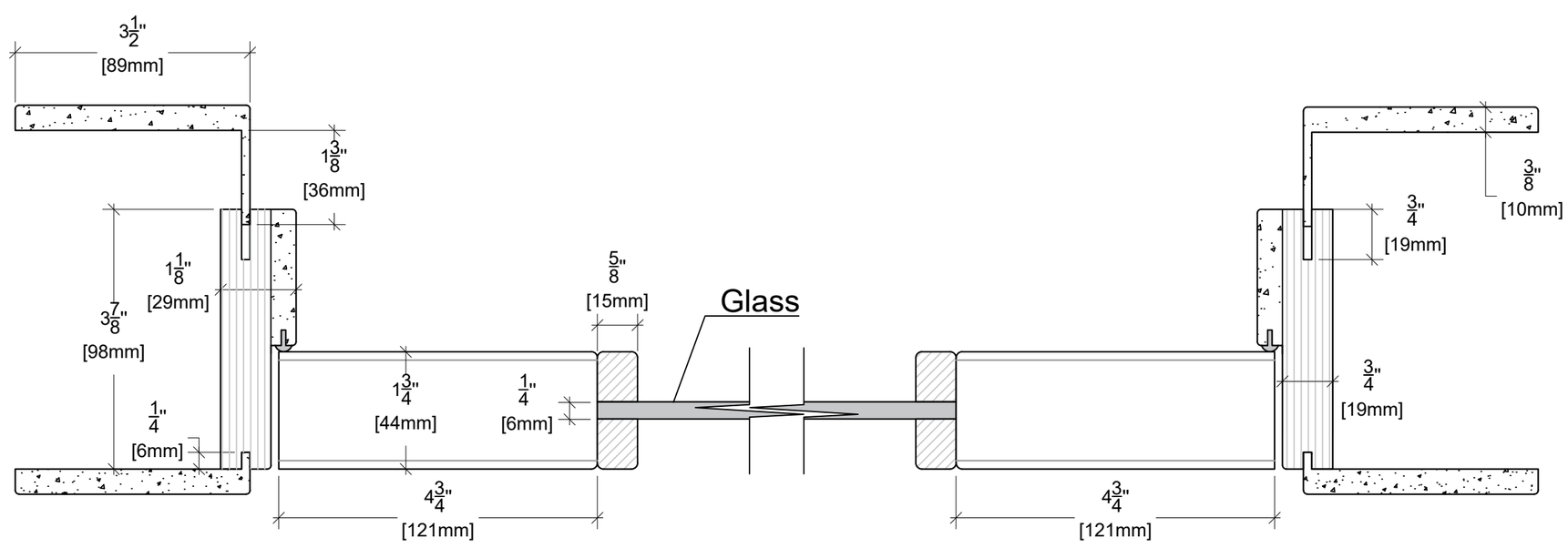

ALMES DOORS

Model: Semplicita- Elivia Horizontal Wood Grain La Luce

Configuration: D Swing 80"