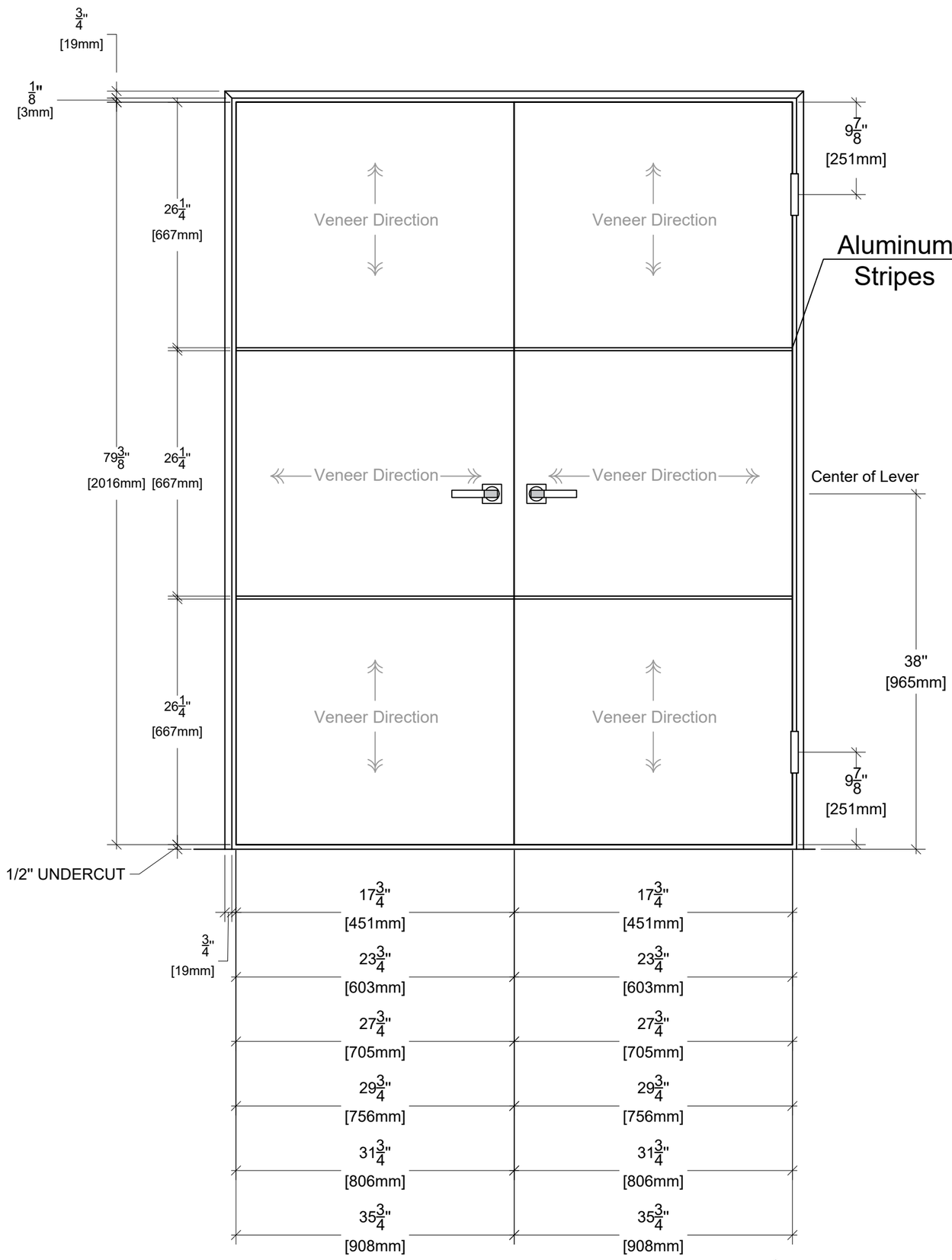

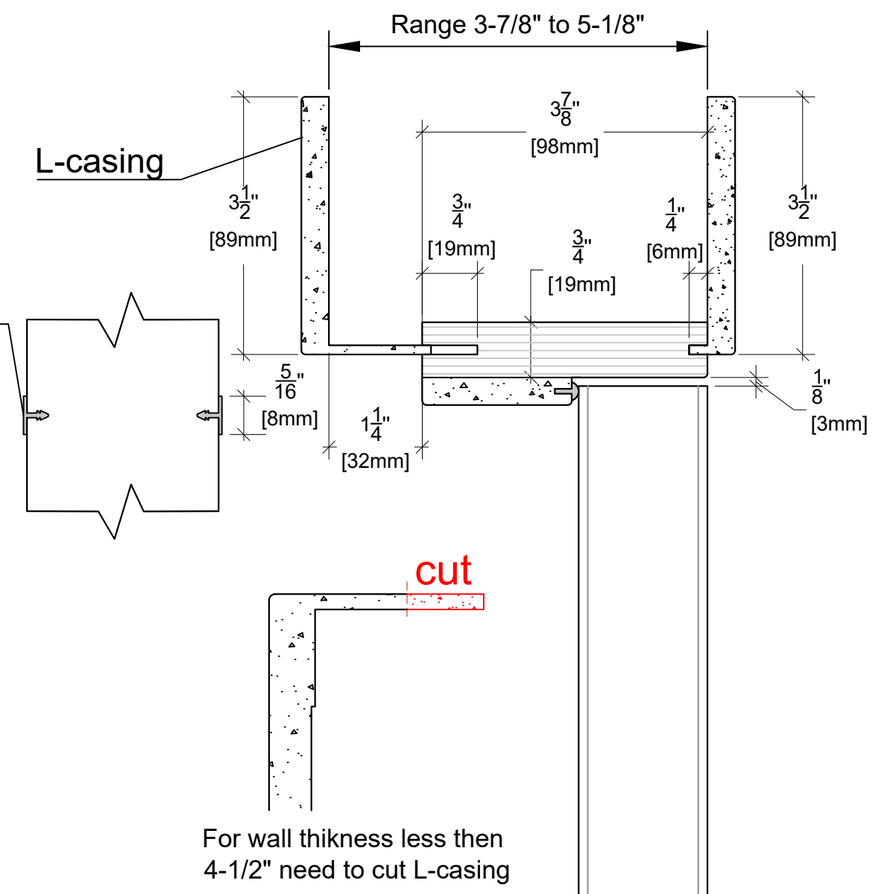

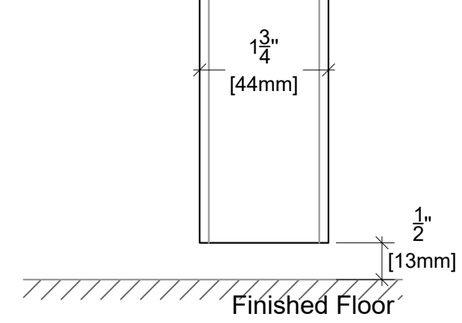

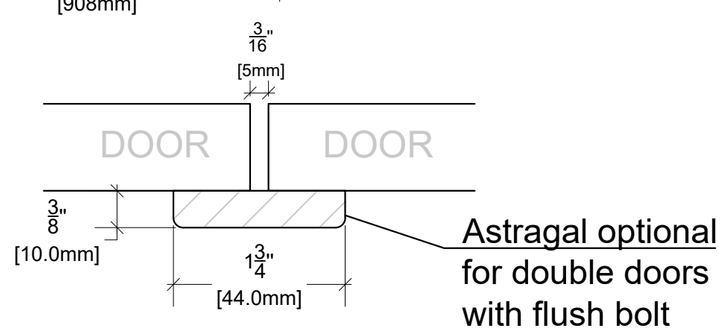

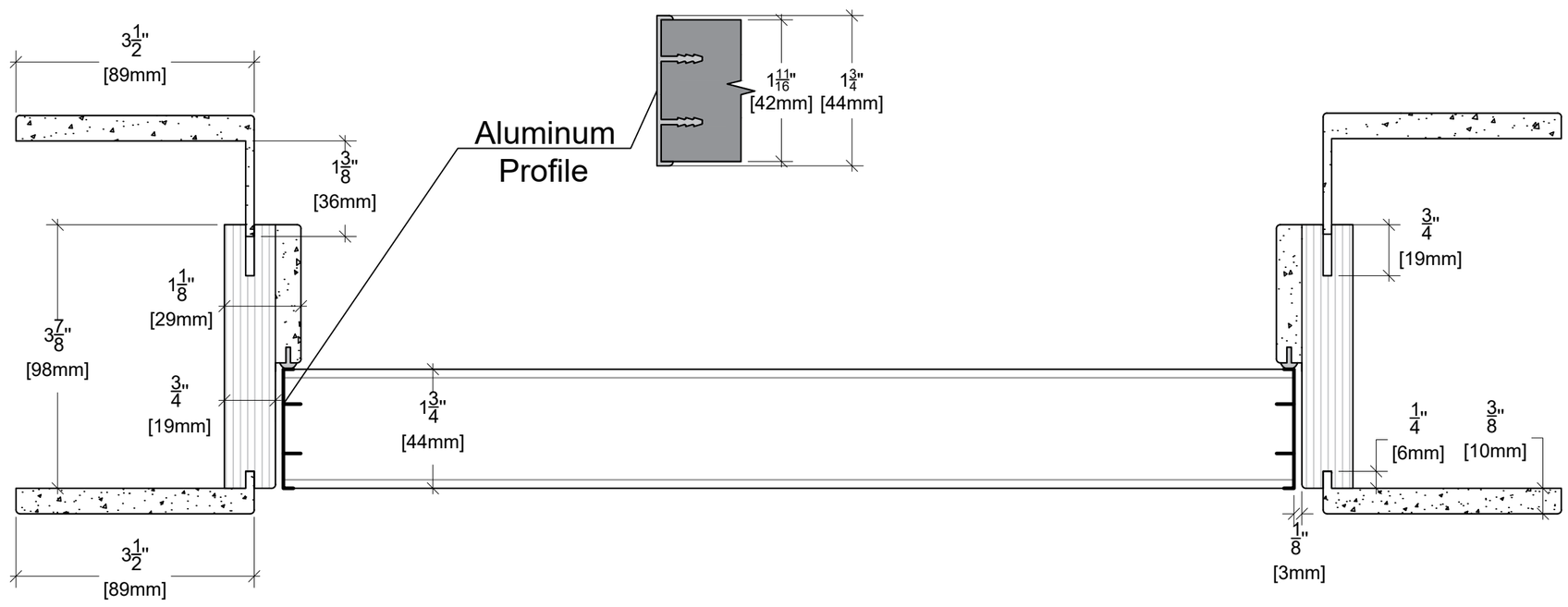

ALMES DOORS

Model: Semplicita - Sofia

Configuration: D Swing 80"