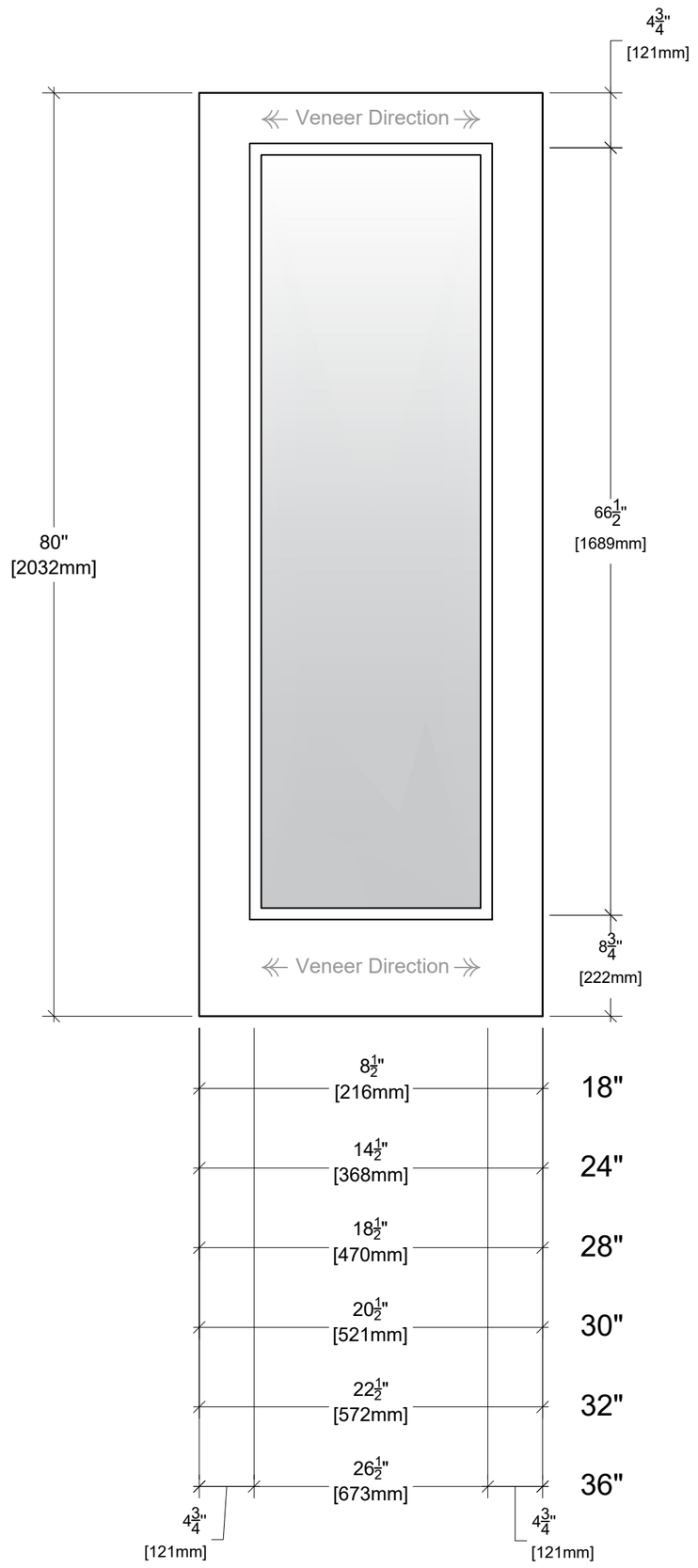

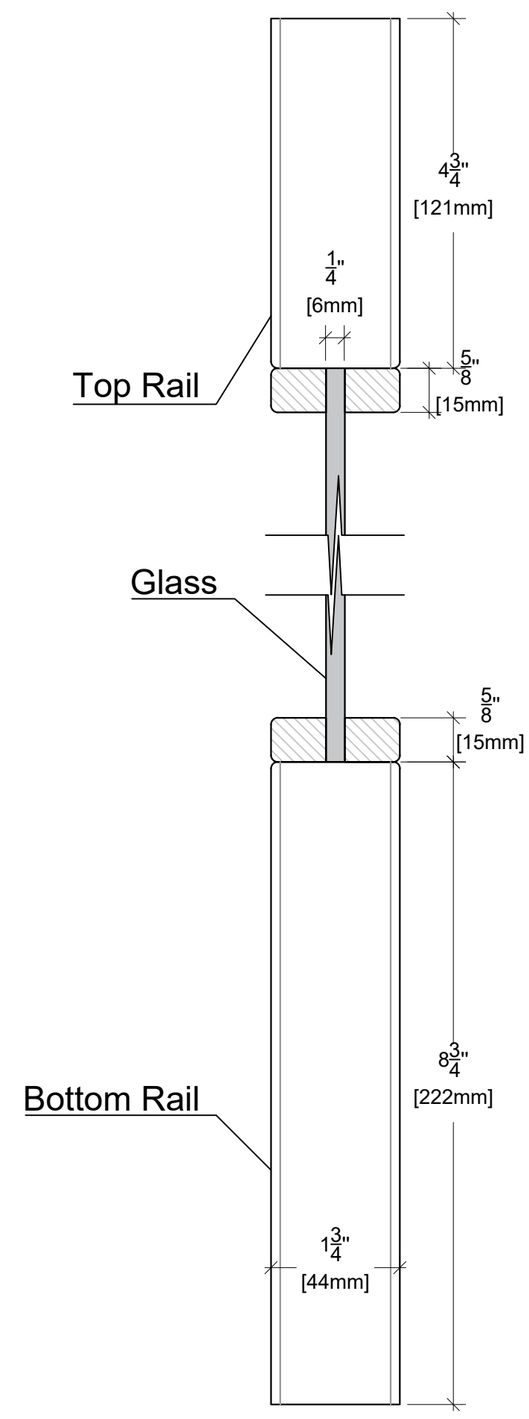

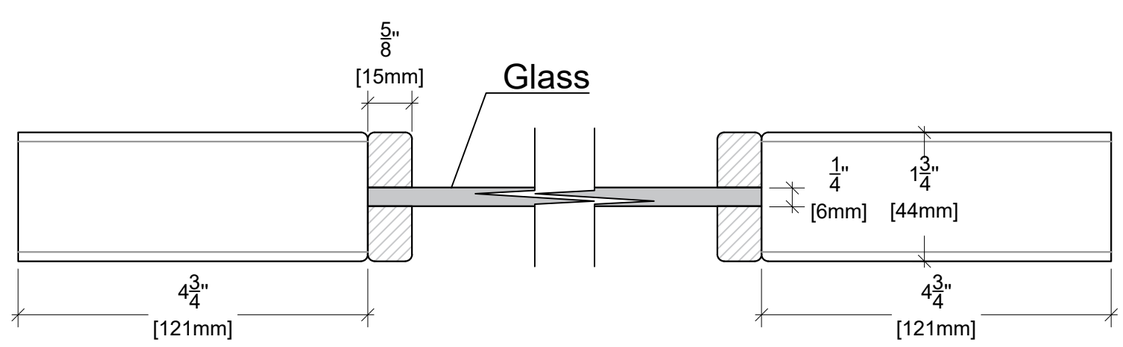

ALMES DOORS

Model: Semplicita - Elivia Horizontal Wood Grain La Luce

Configuration: Slab 80"