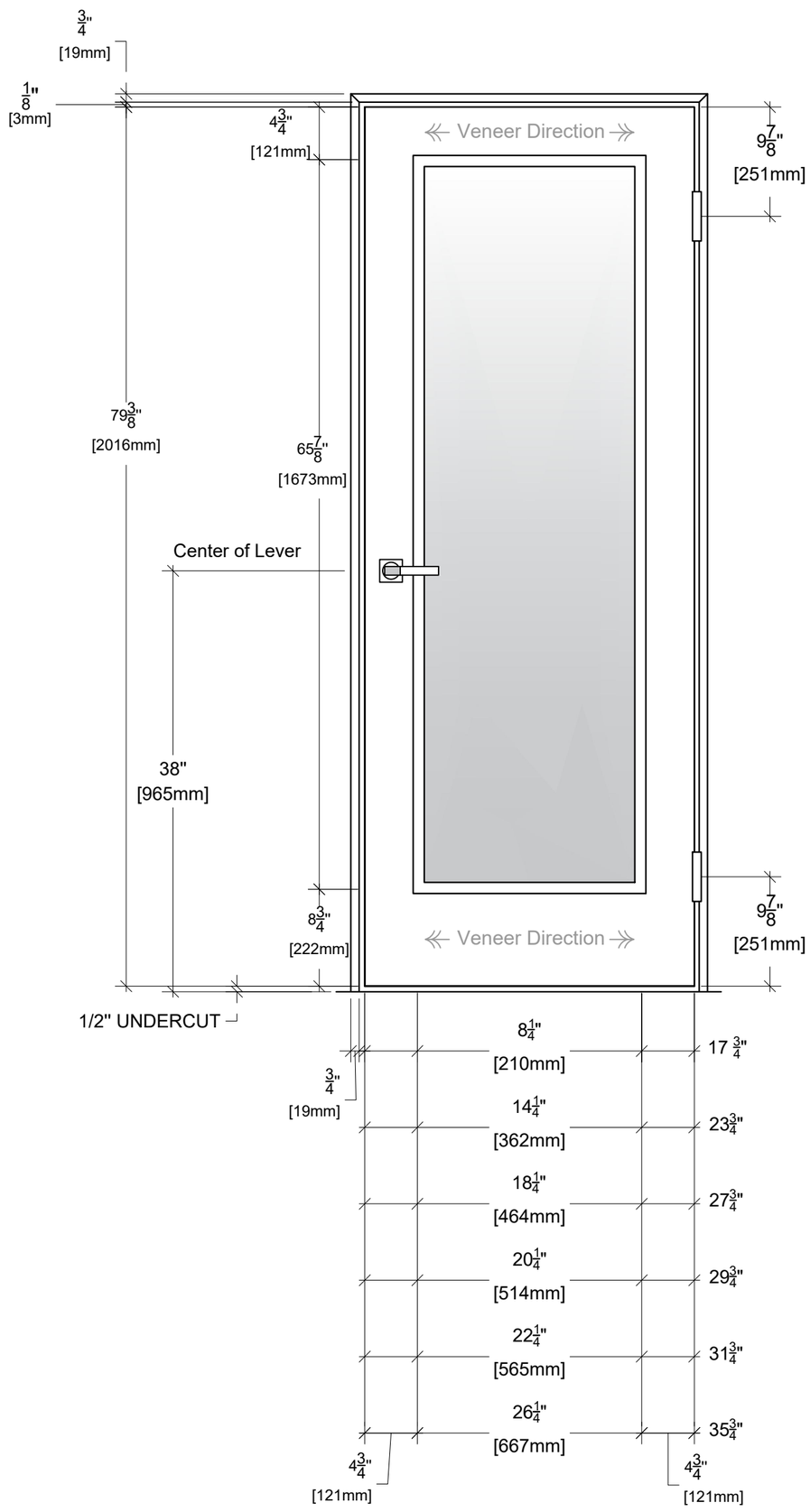

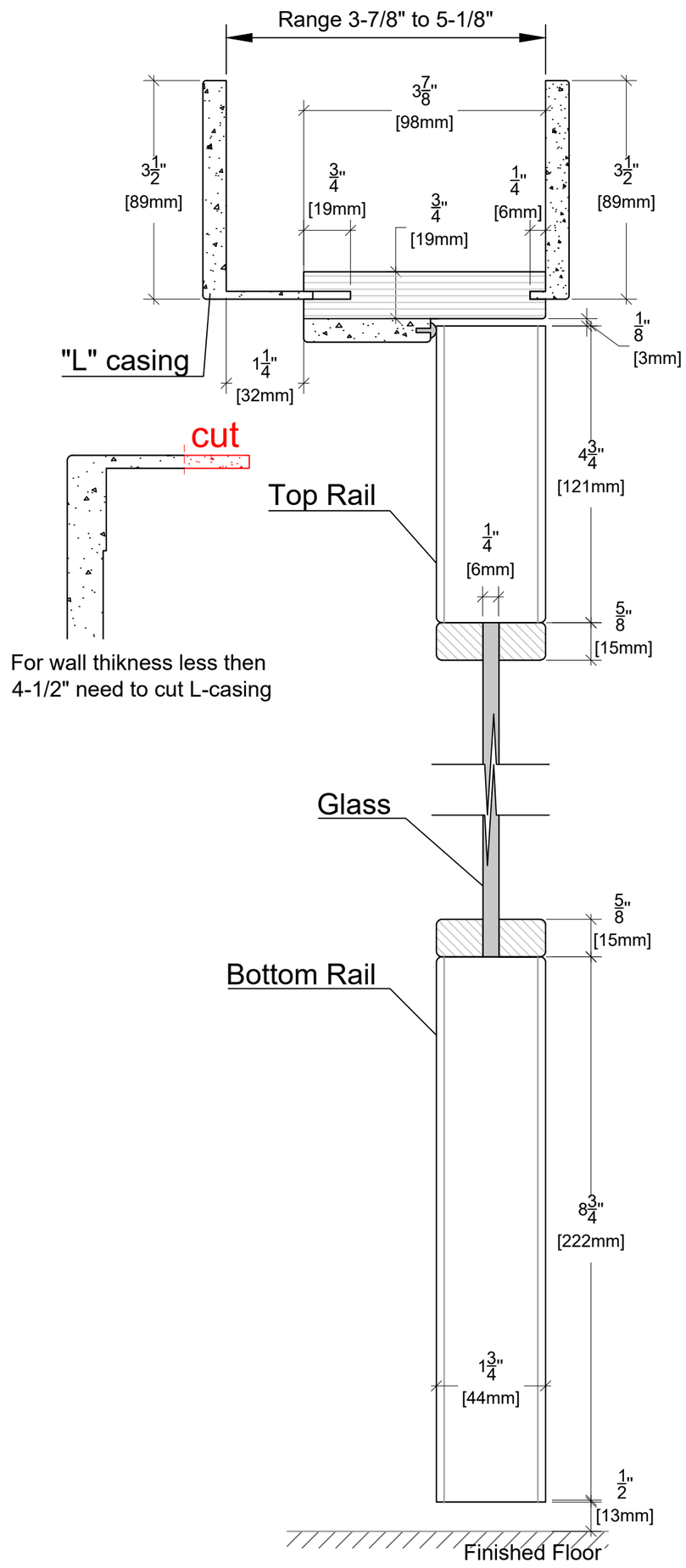

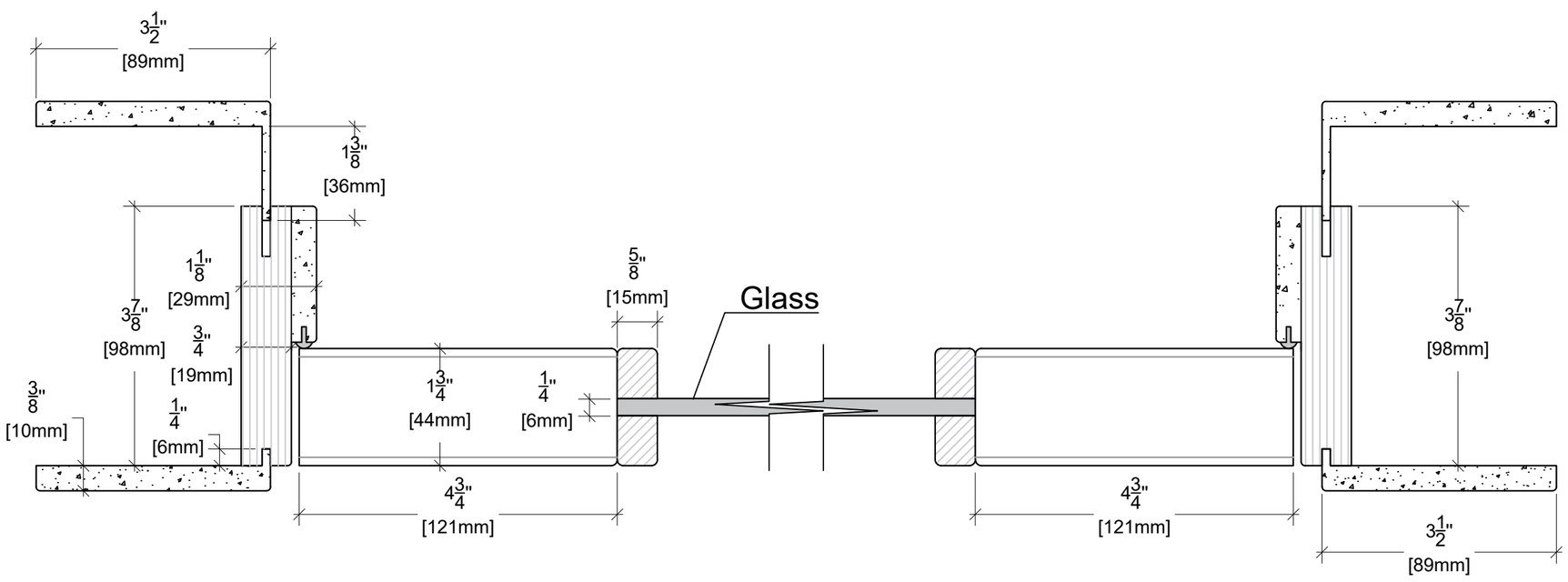

ALMES DOORS

Model: Semplicita- Elivia Horizontal Wood Grain La Luce

Configuration: Swing 80"