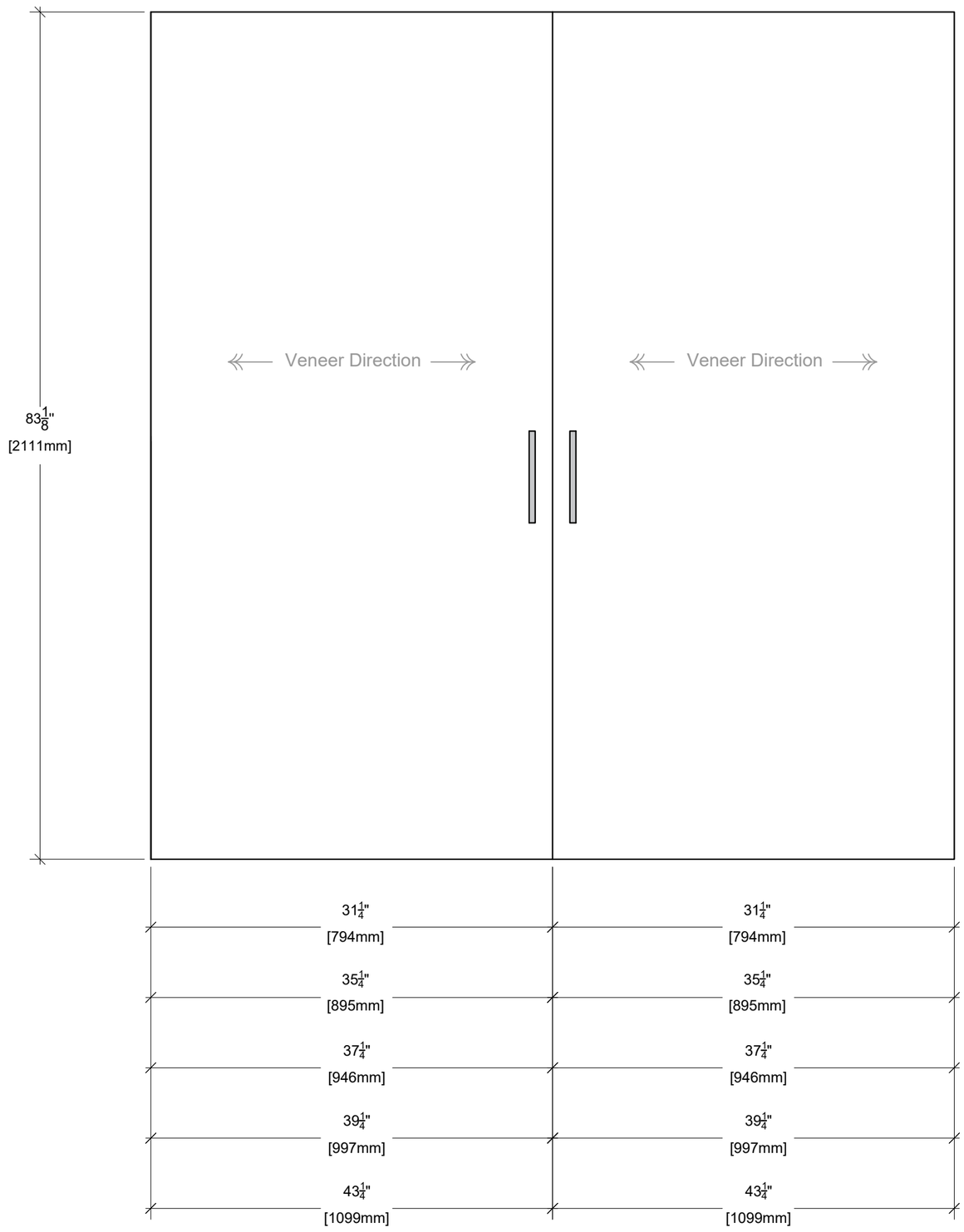

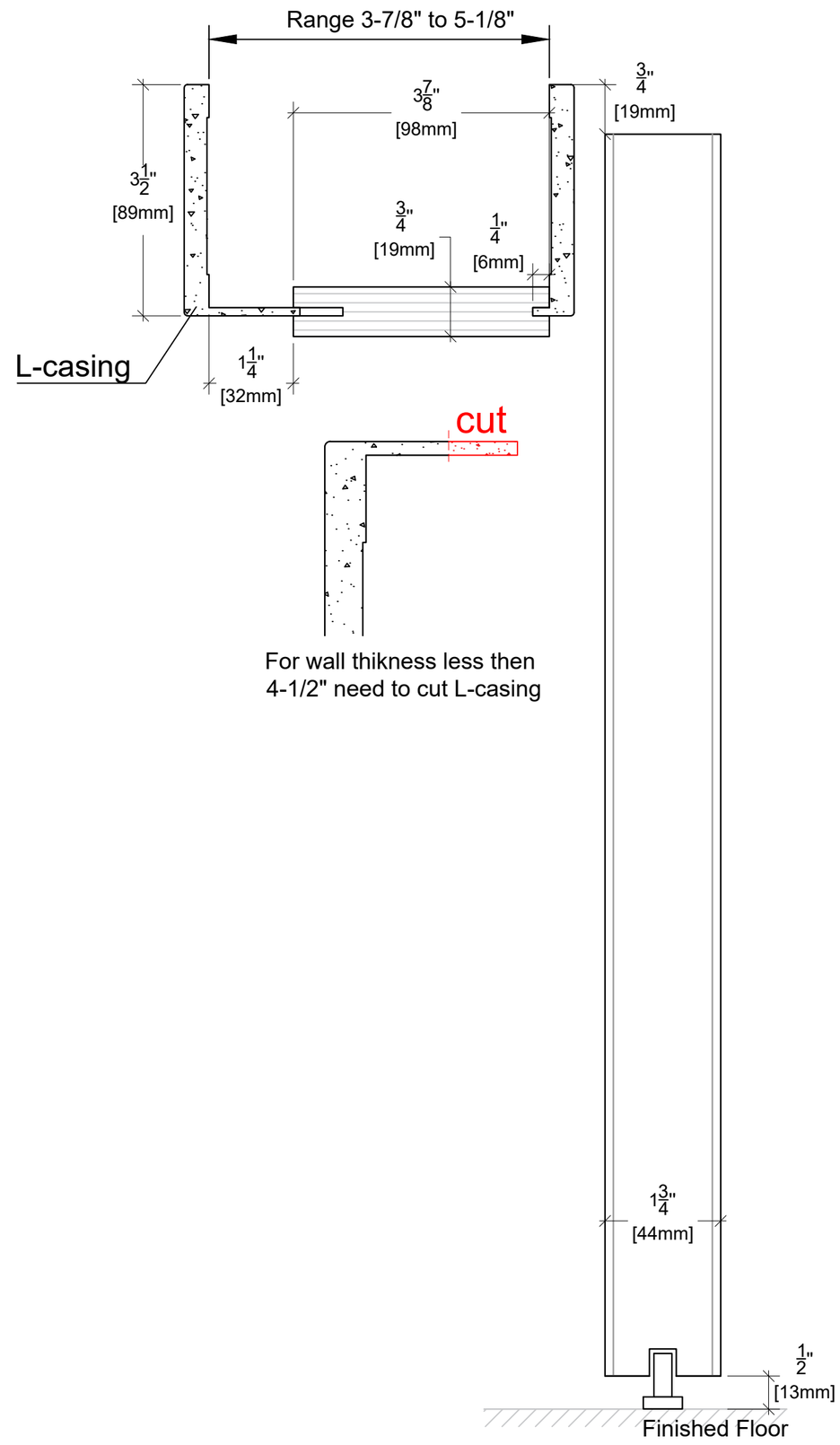

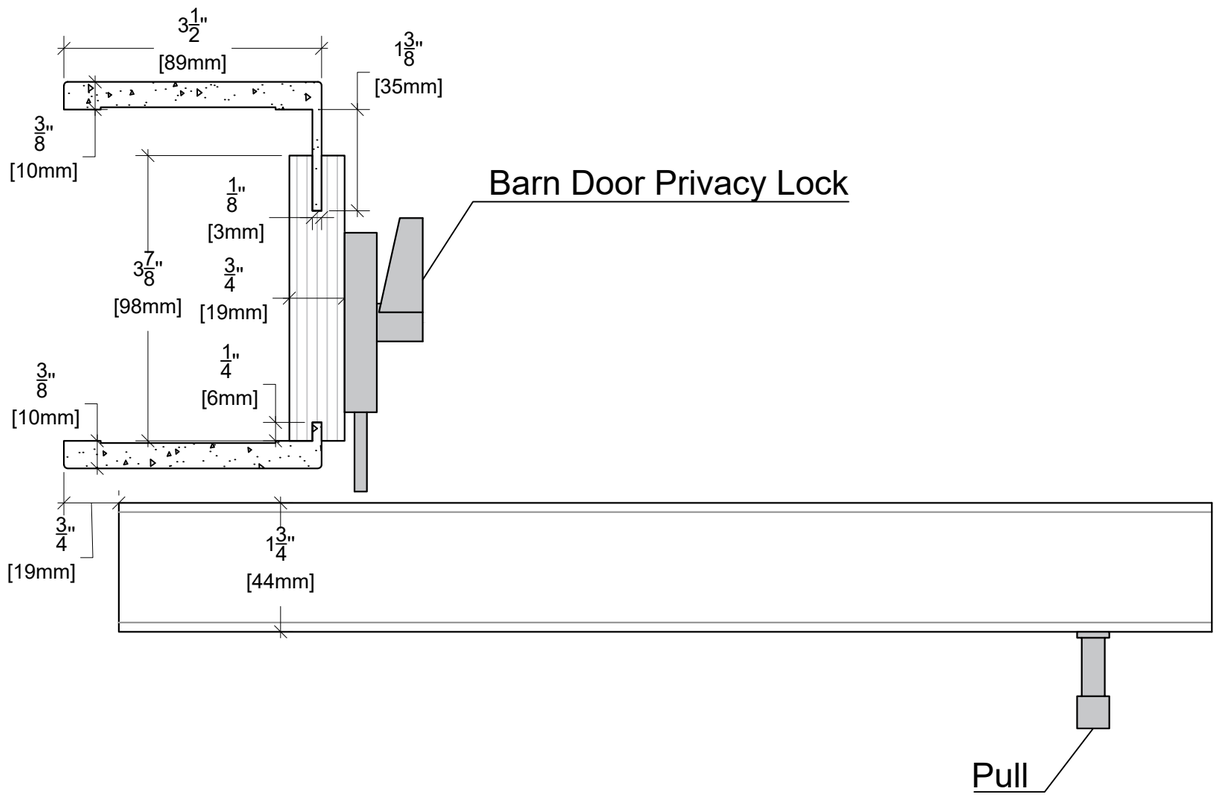

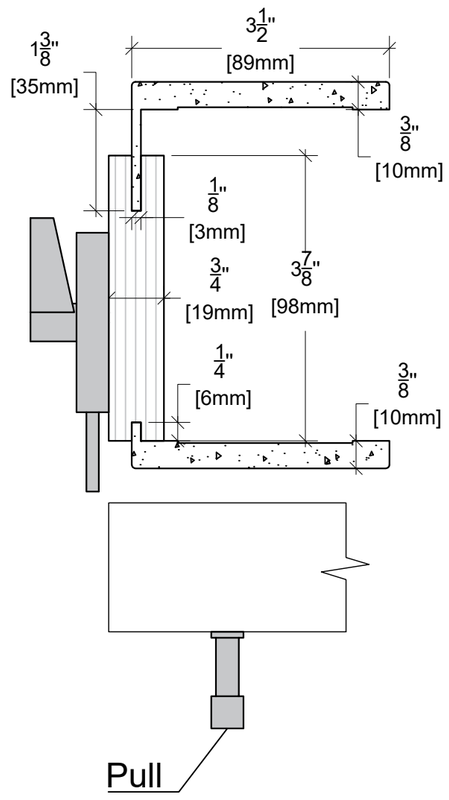

ALMES DOORS

Model: Semplicita - Elivia Horizontal Wood Grain

Configuration: D Barn 82"