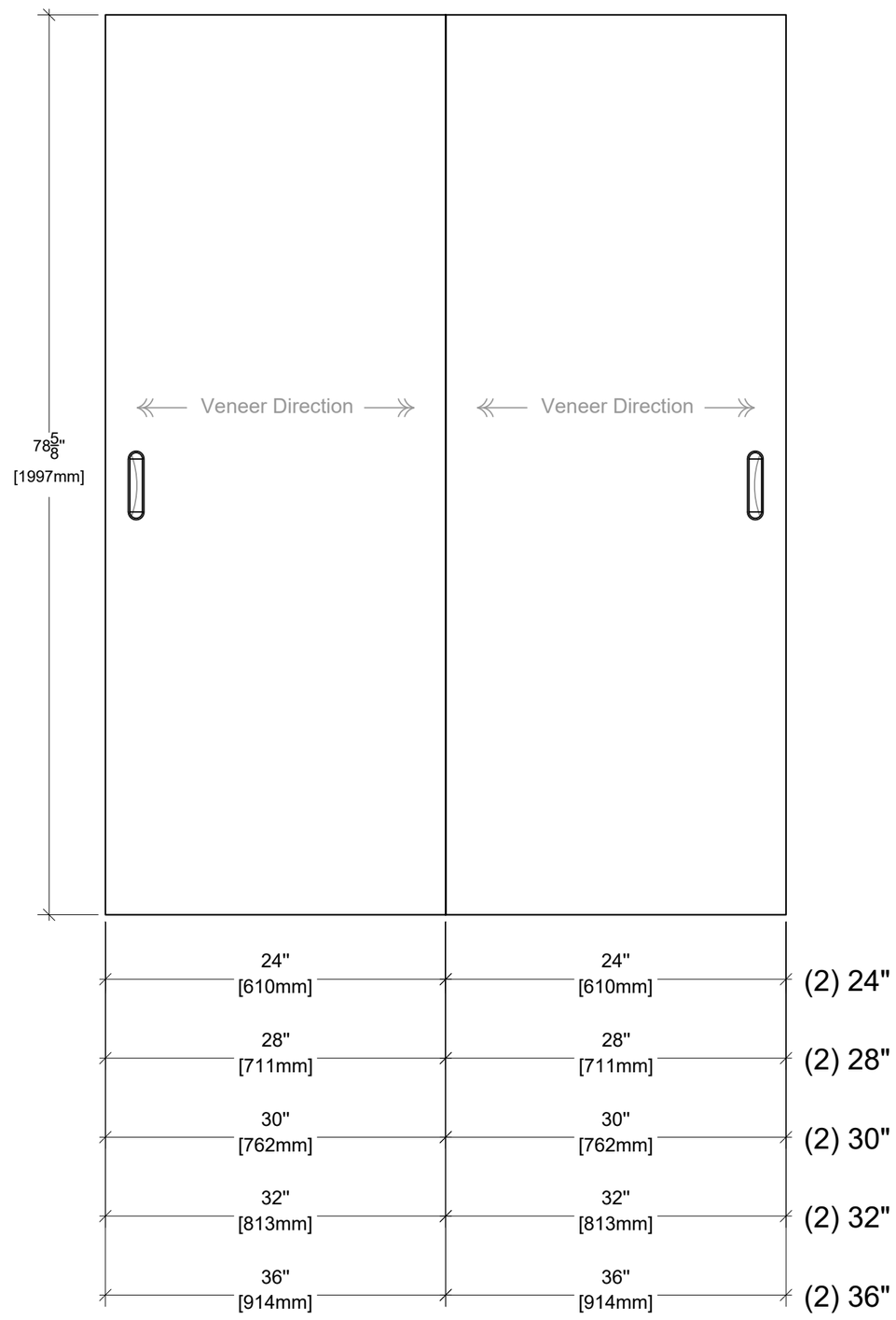


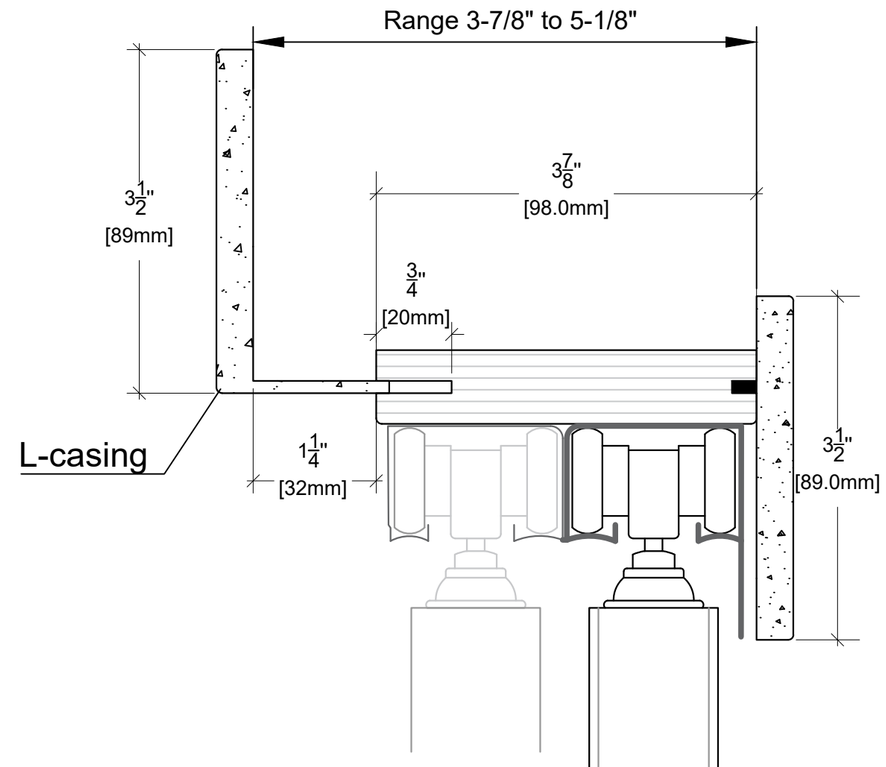


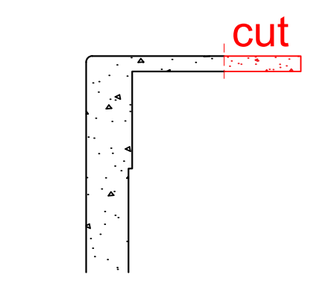


For wall thikness less then
4-1/2" need to cut L-casing

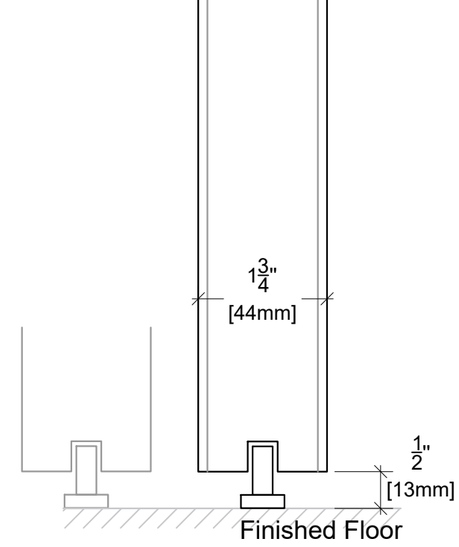


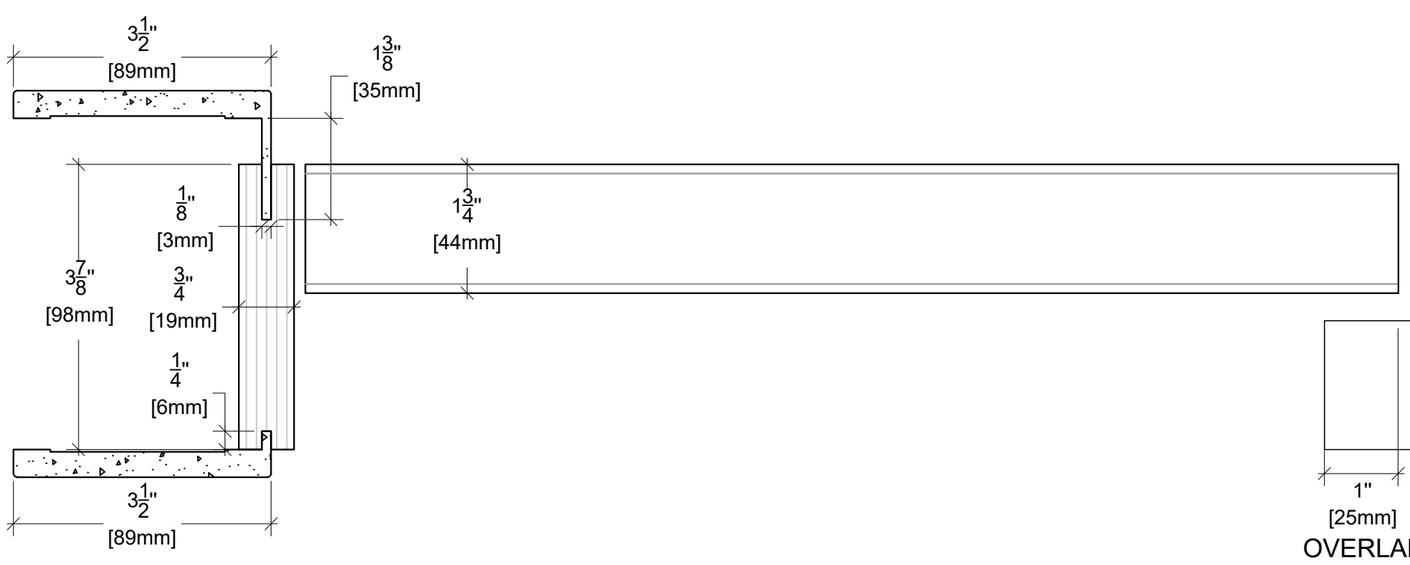


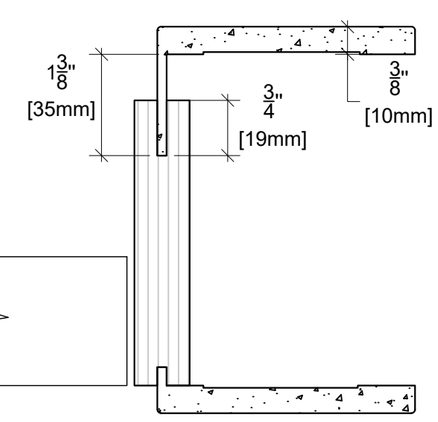


ALMES DOORS

Model: Semplicita - Elivia Horizontal Wood Grain

Configuration: Bypass 80"