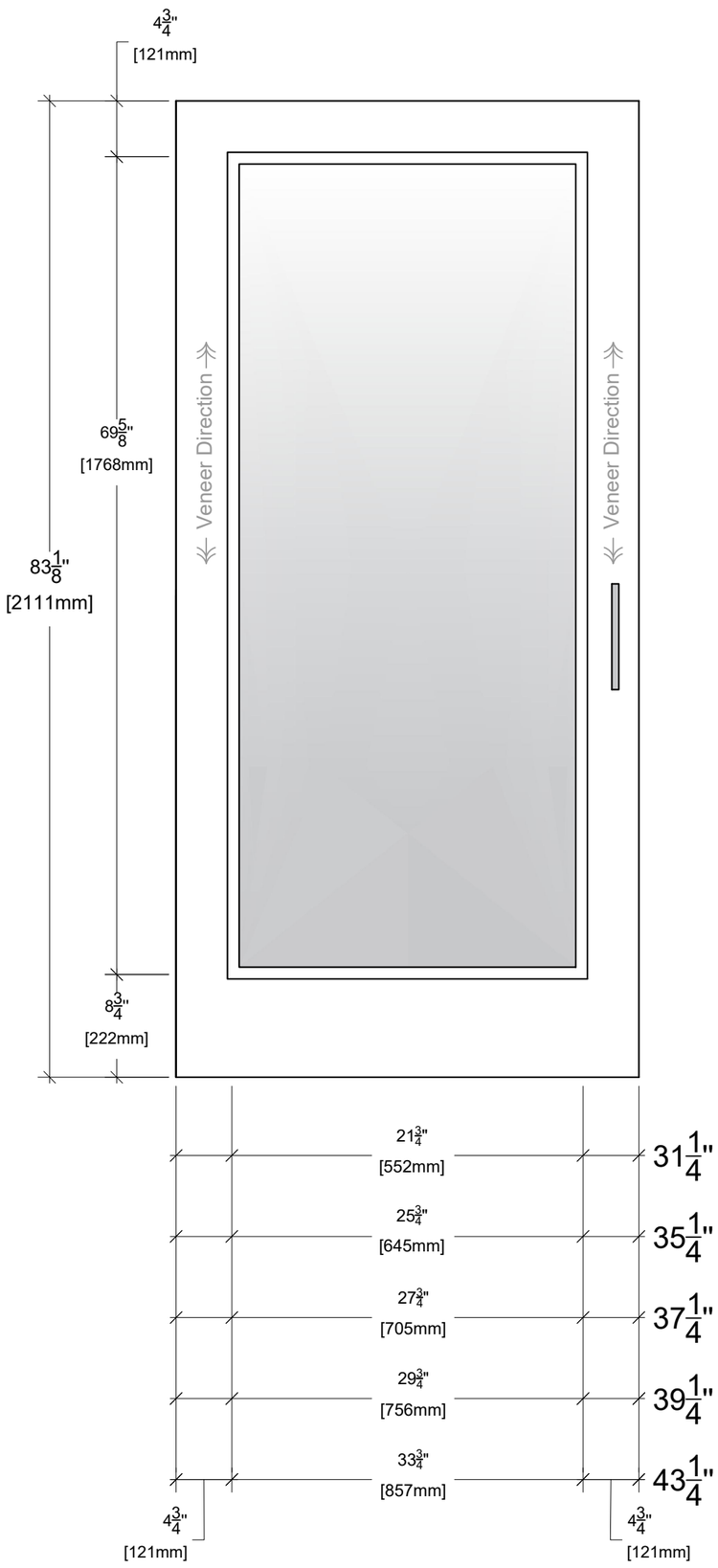

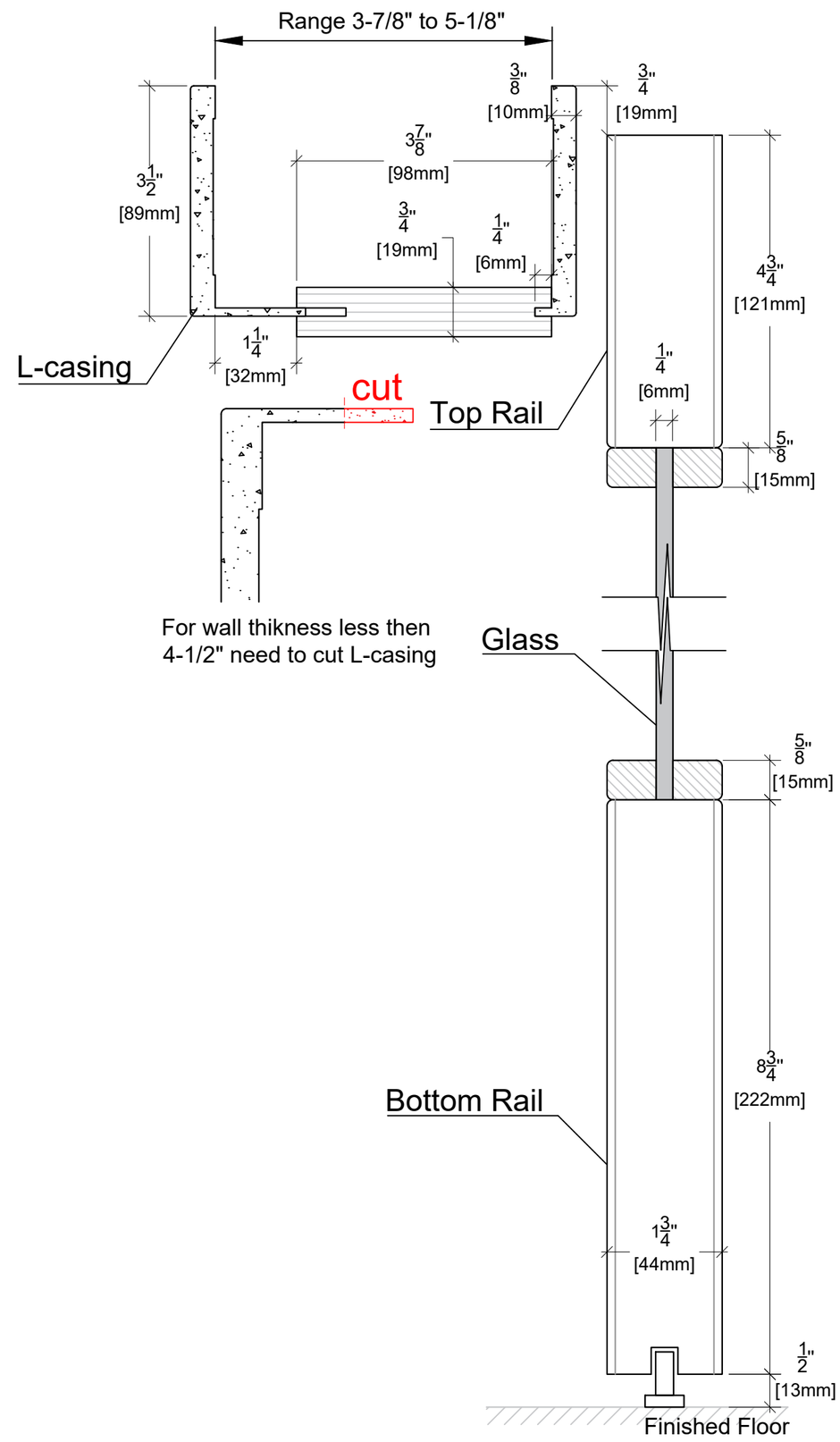

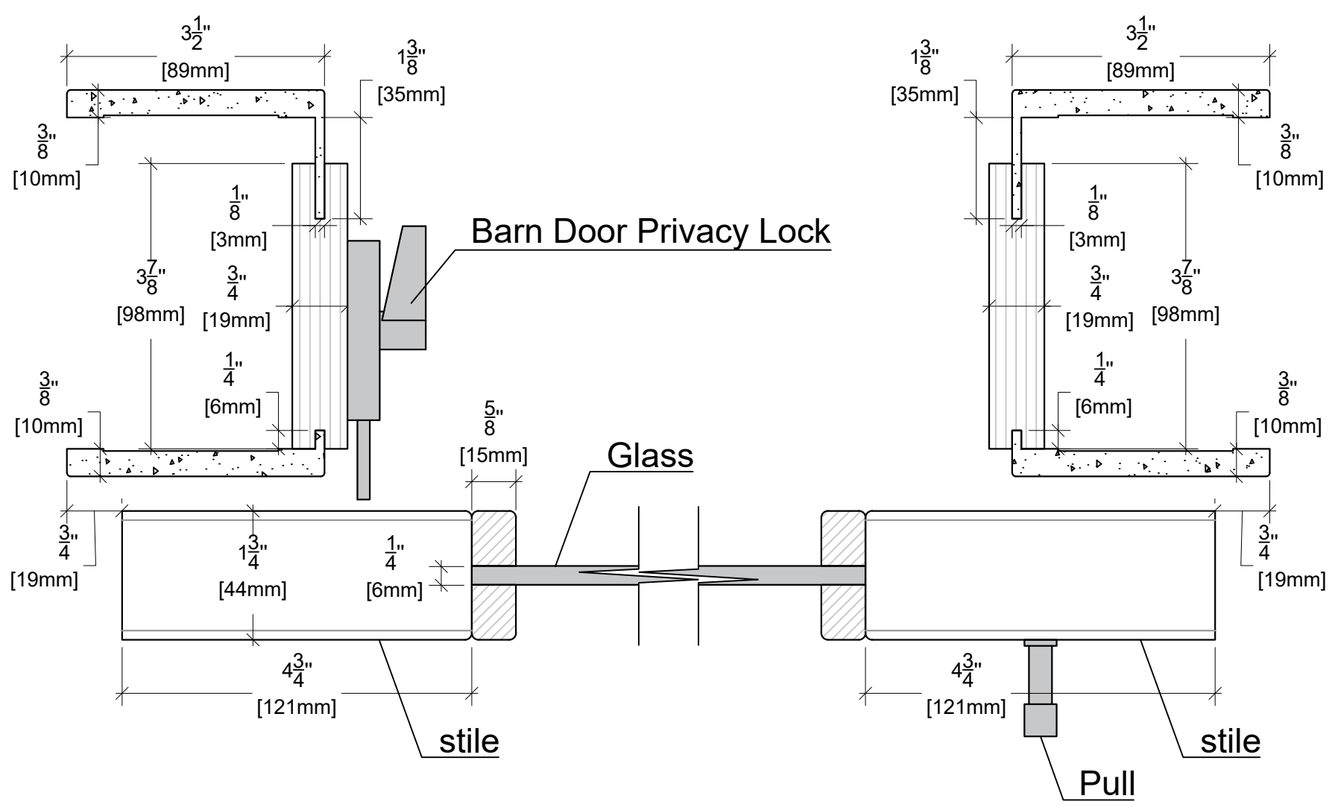

Model: Semplicita- Elivia Vertical Wood Grain La Luce

Configuration: Barn 82"