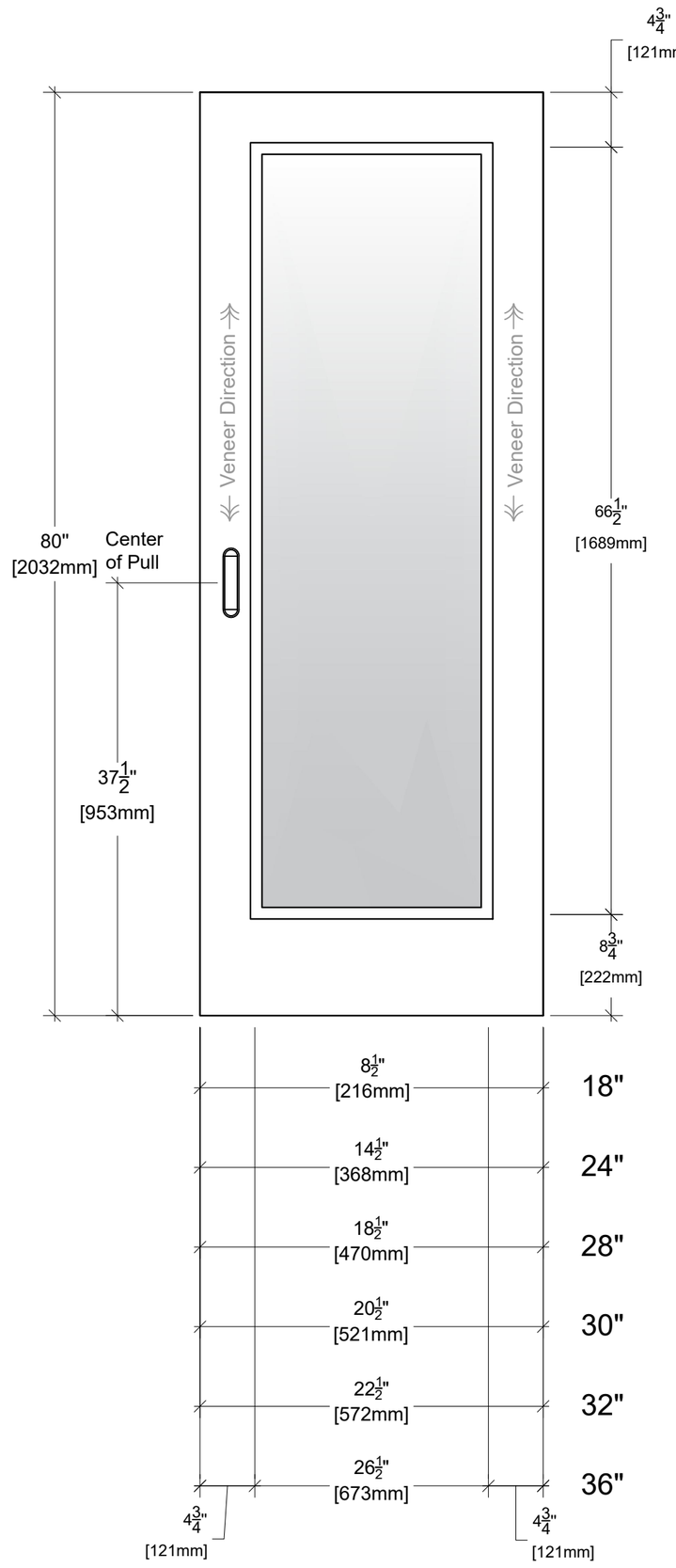

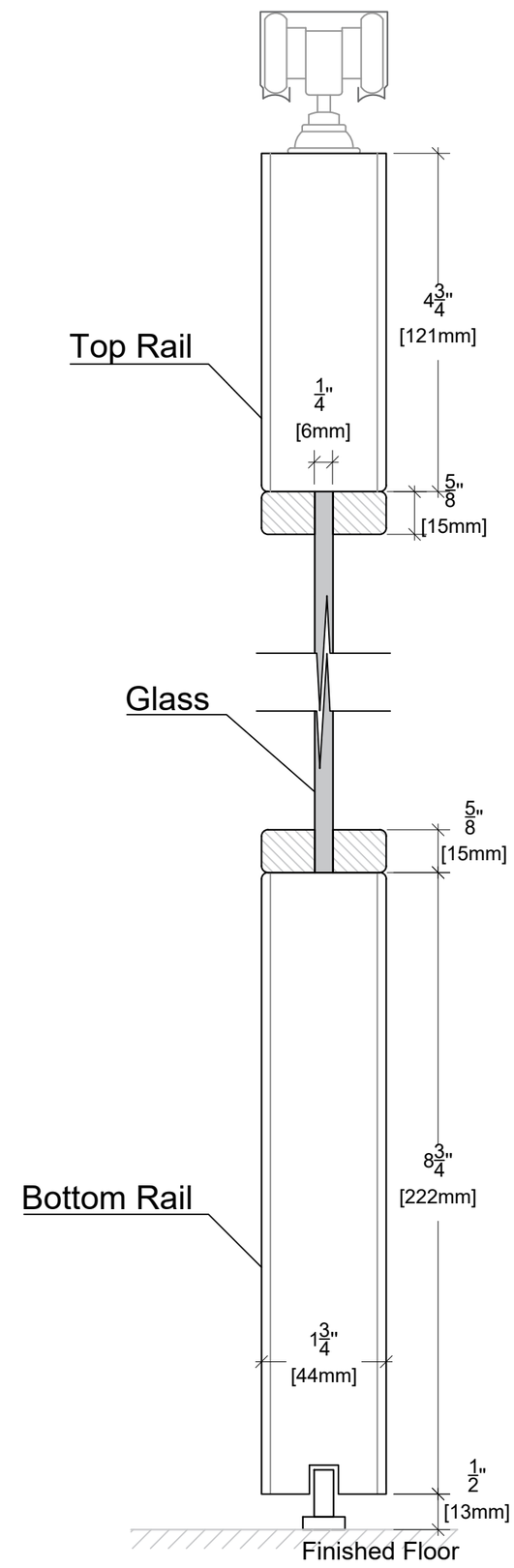

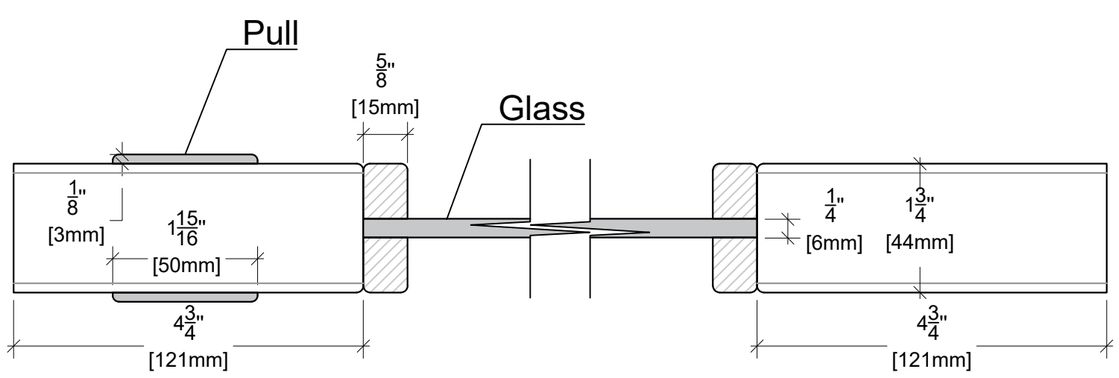

ALMES DOORS

Model: Semplicita - Elivia Vertical Wood Grain La Luce

Configuration: Pocket 80"