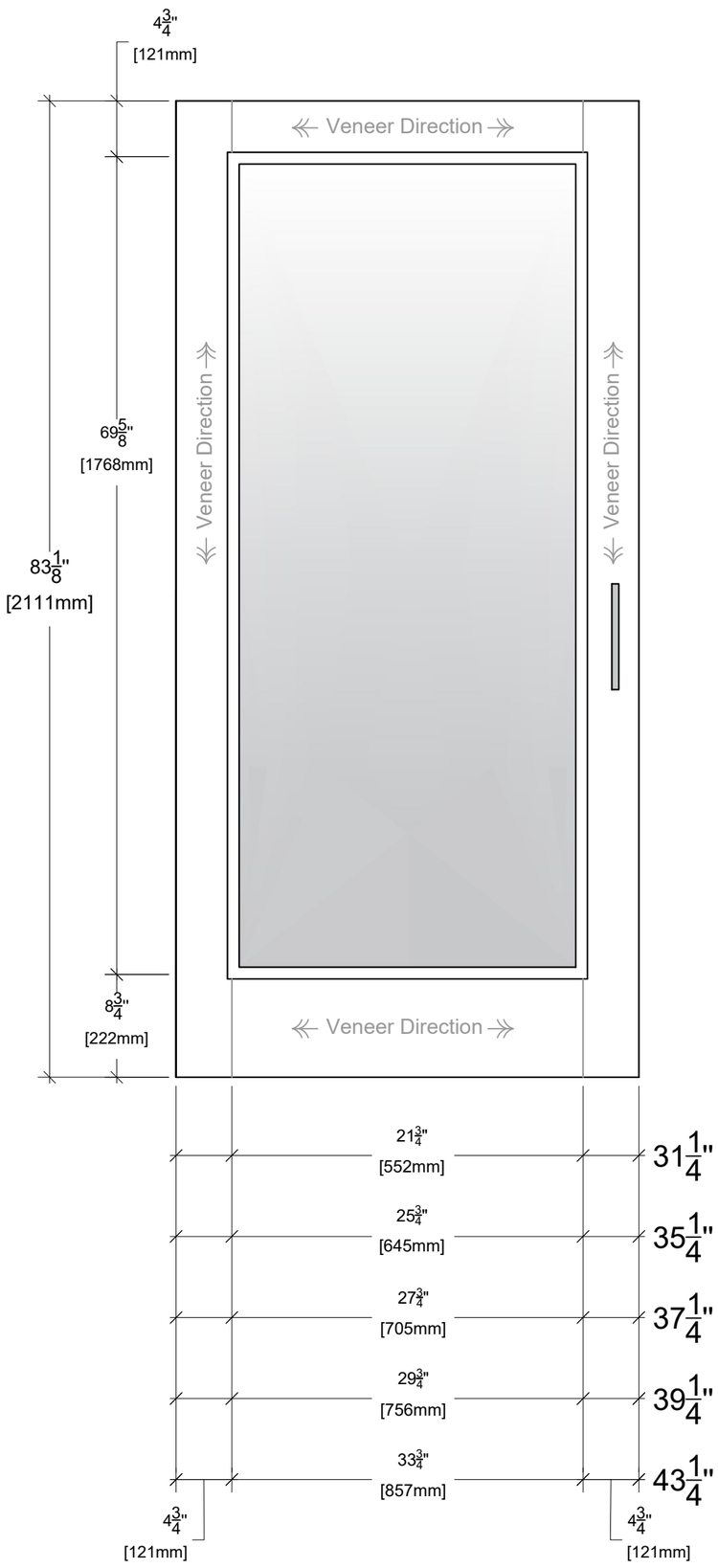

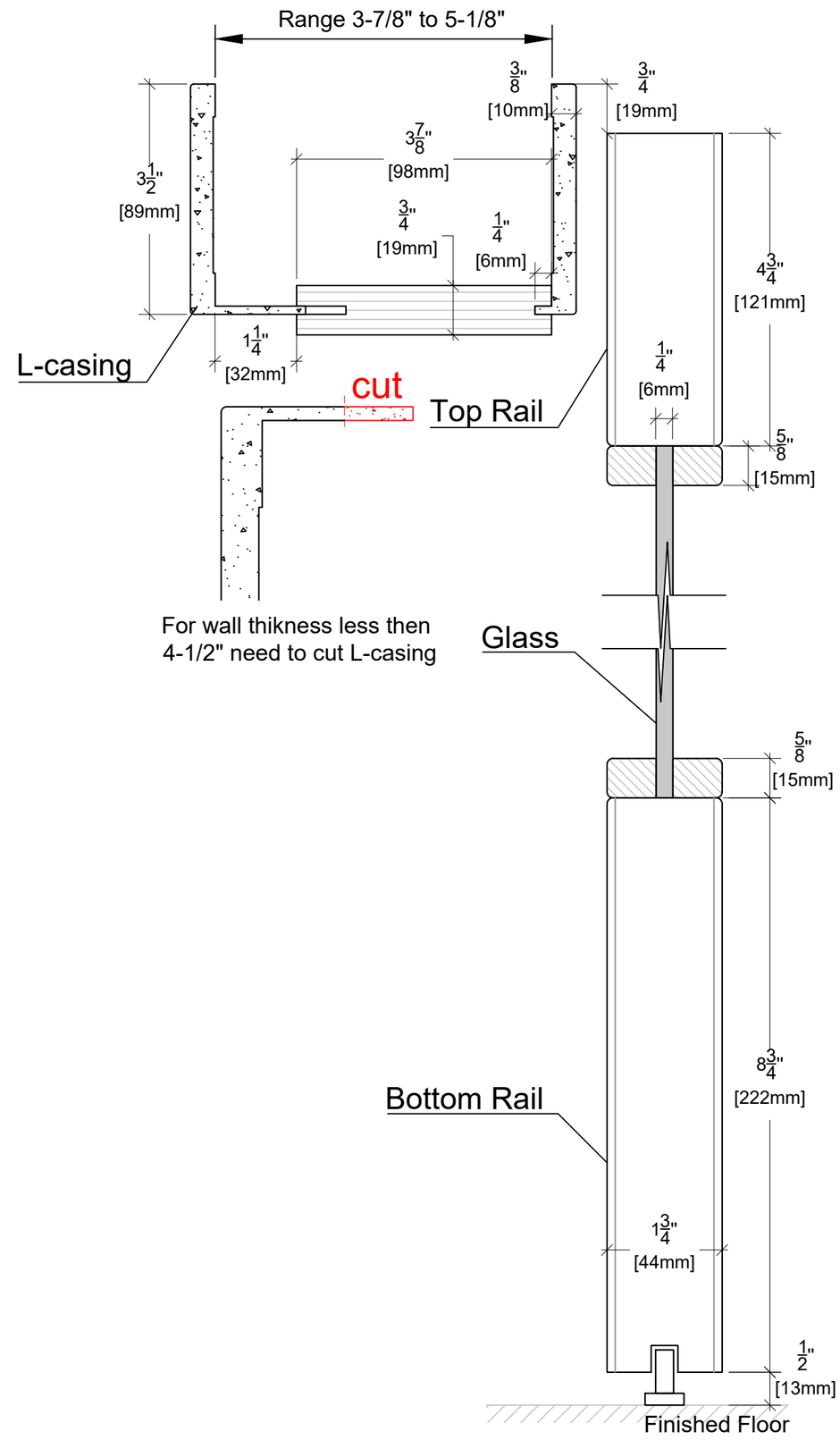

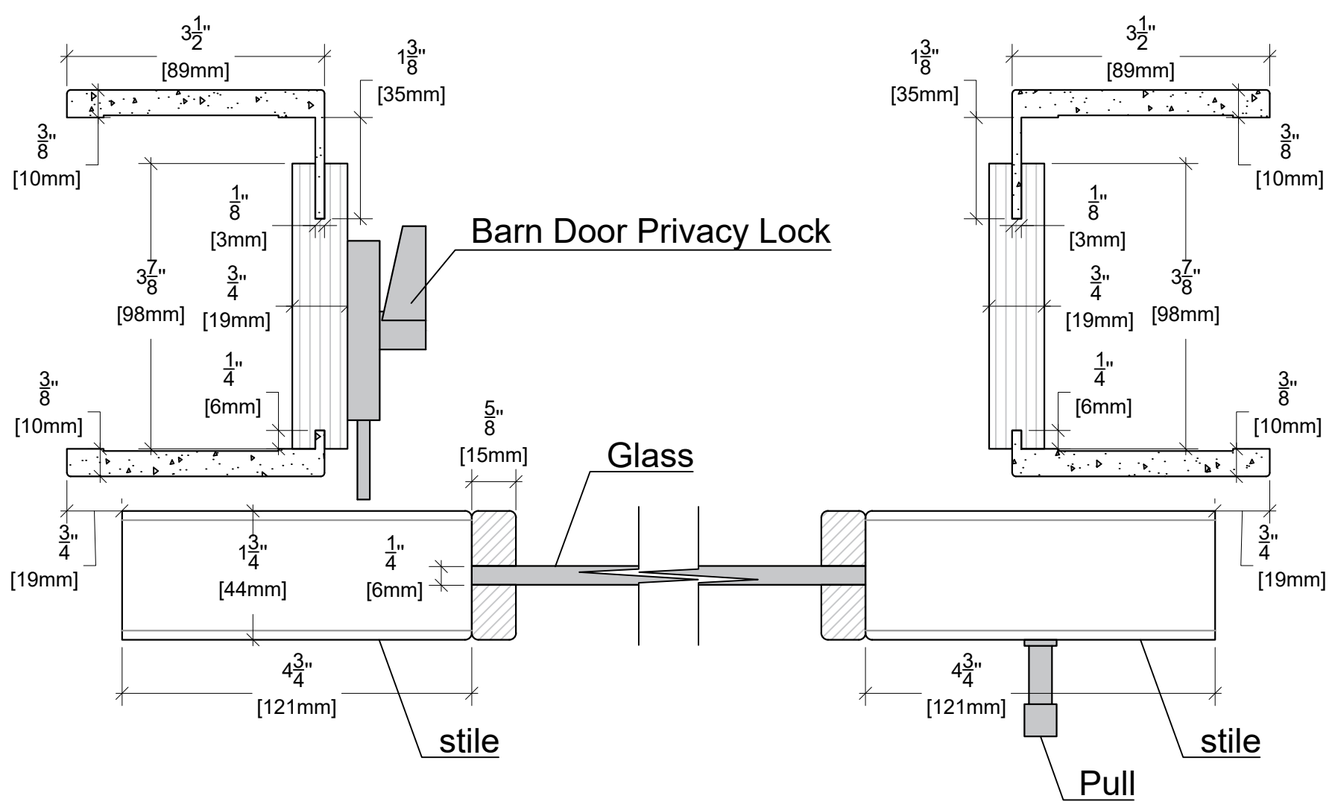

ALMES DOORS

Model: Semplicita- Palermo La Luce

Configuration: Barn 82"