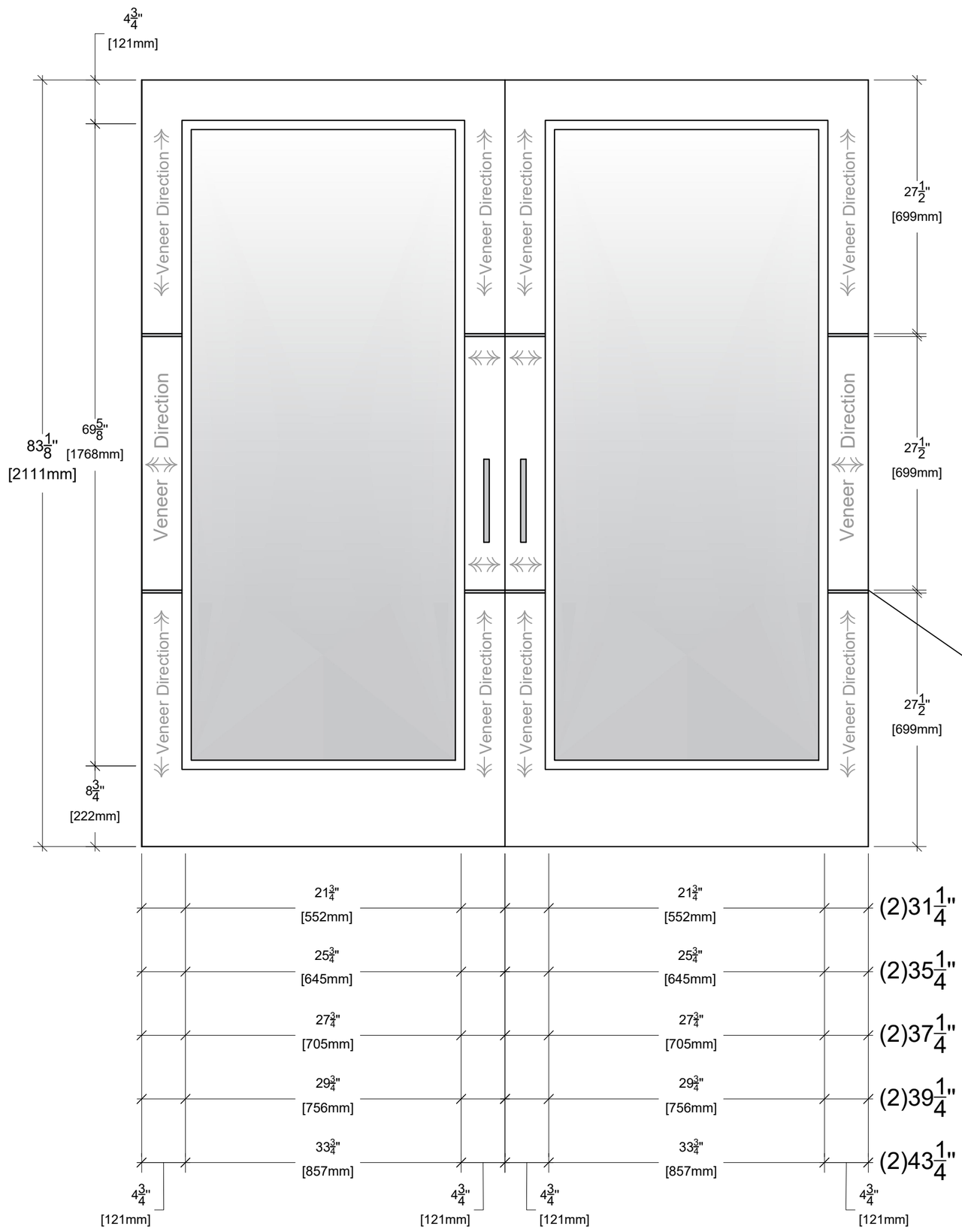

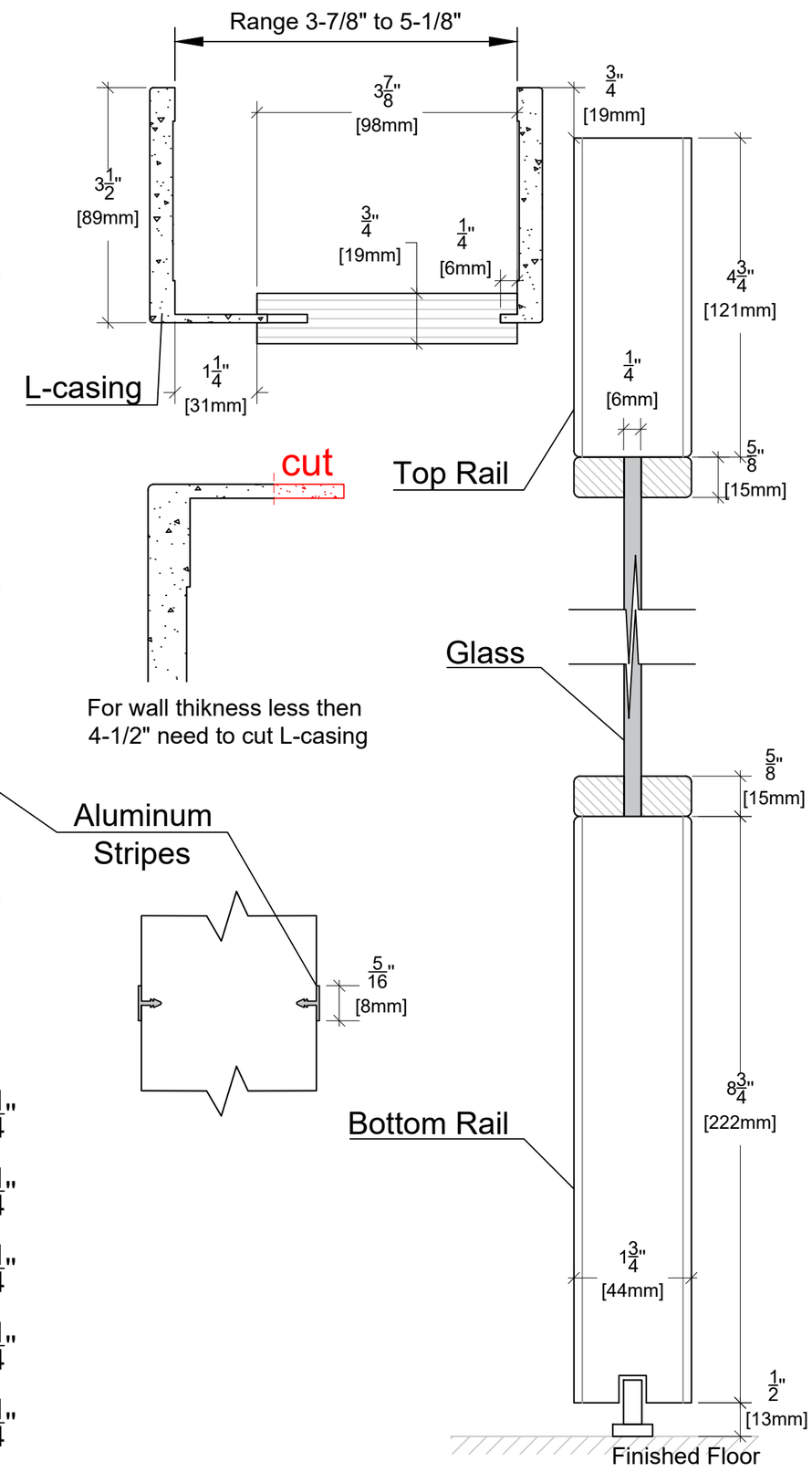

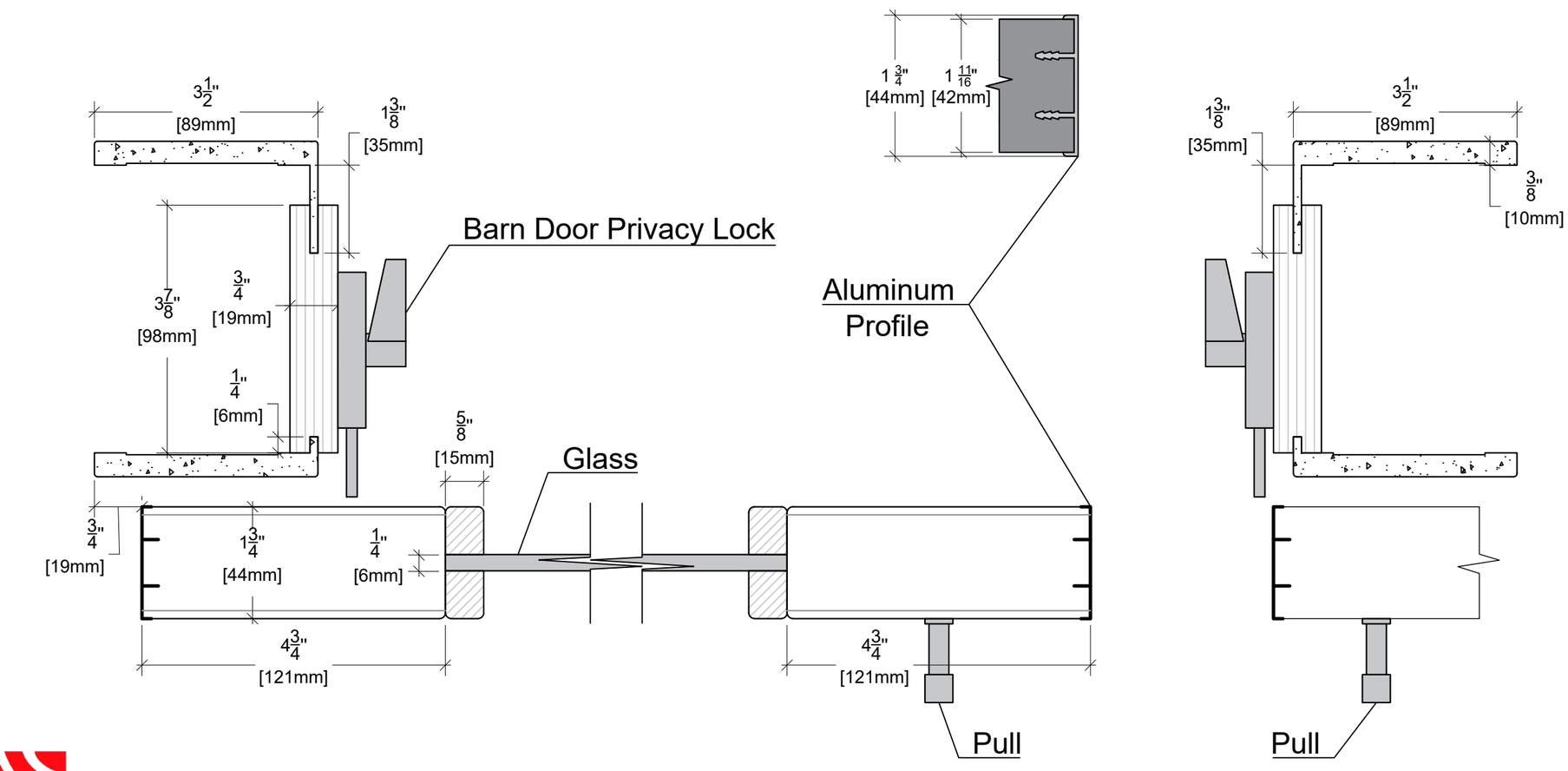

ALMES DOORS

Model: Semplicita - Sofia La Luce

Configuration: D Barn 82"