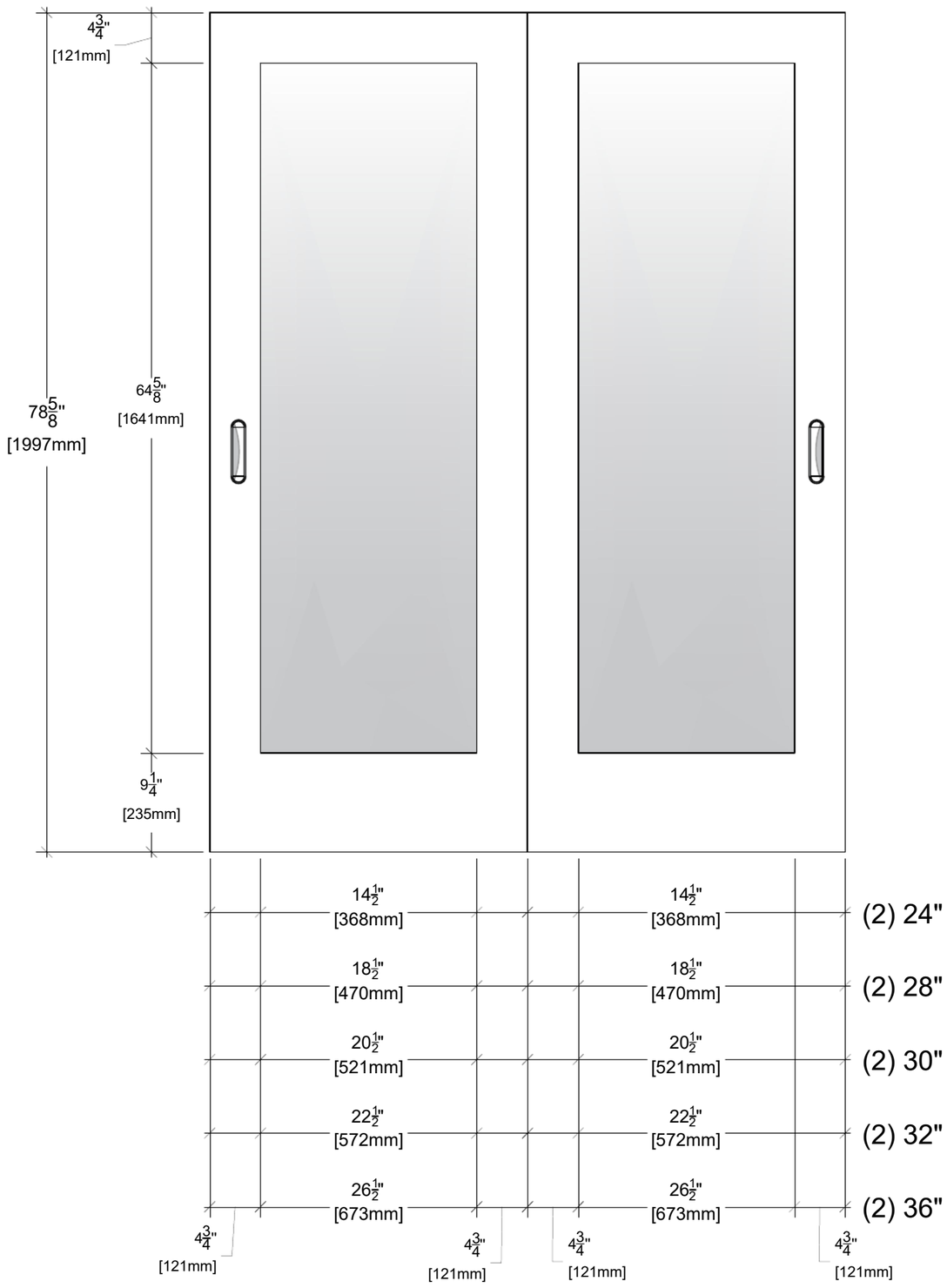

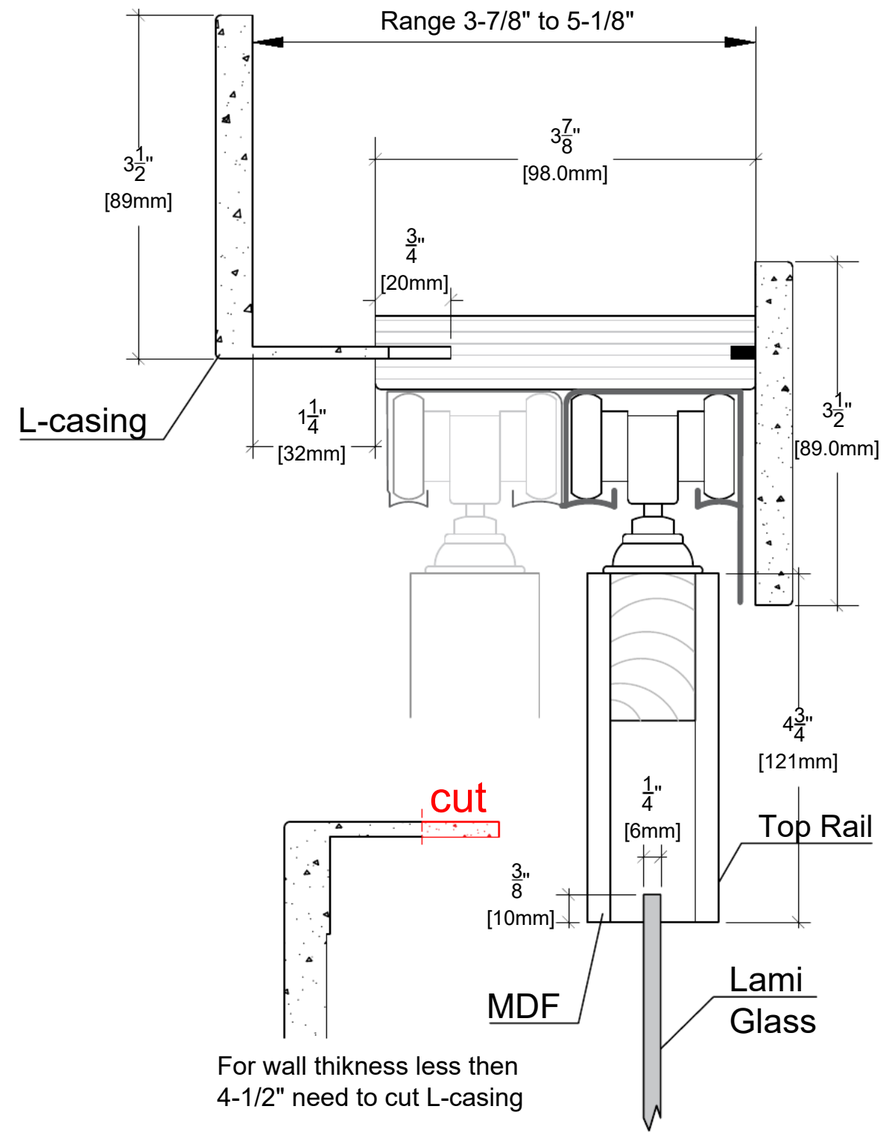

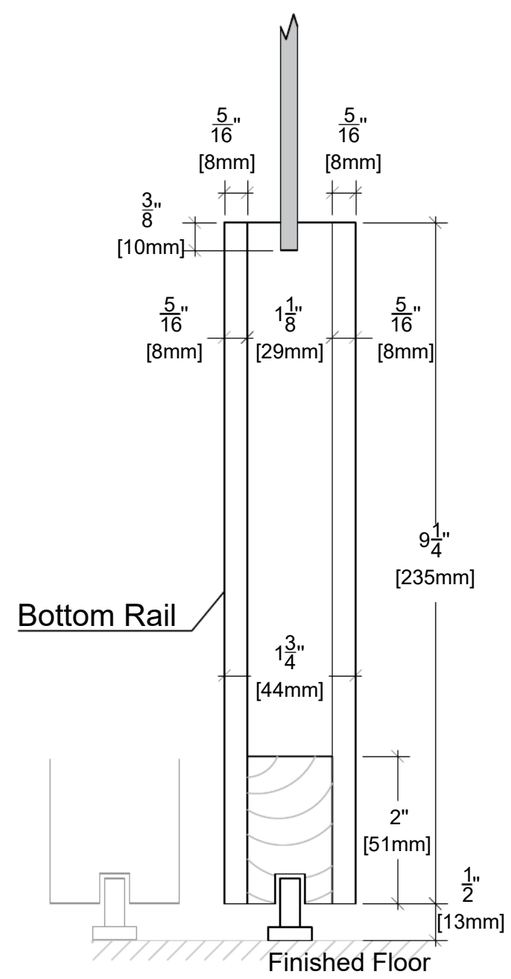

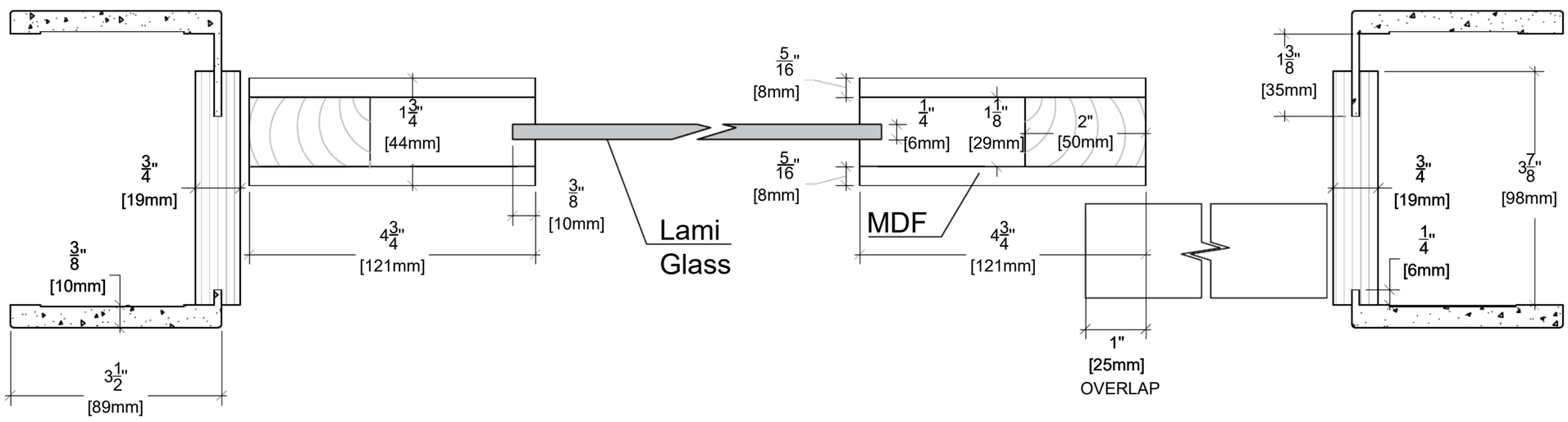

ALMES DOORS

Model: Shaker Style - 1 Light Lami Glass

Configuration: Bypass 80"