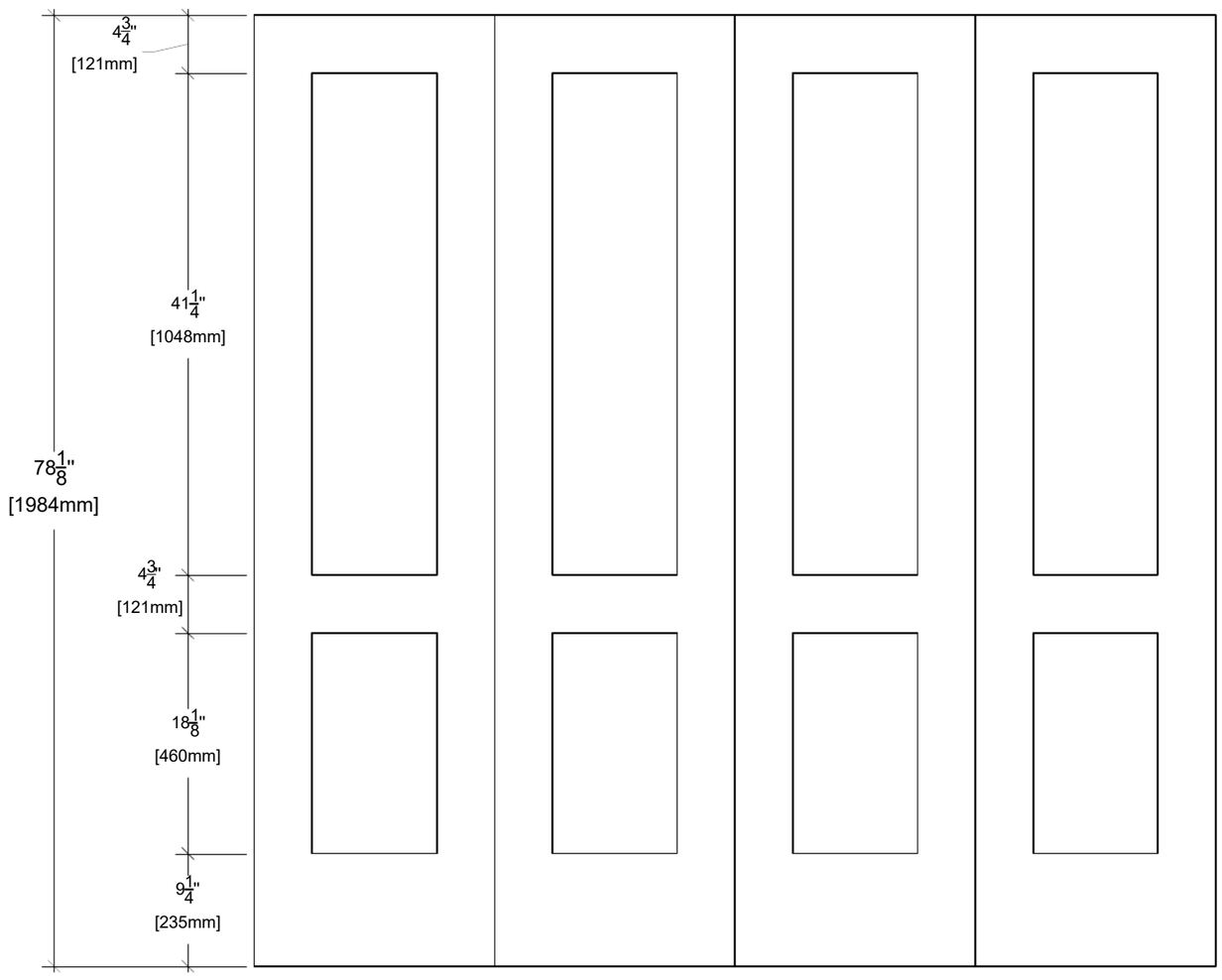

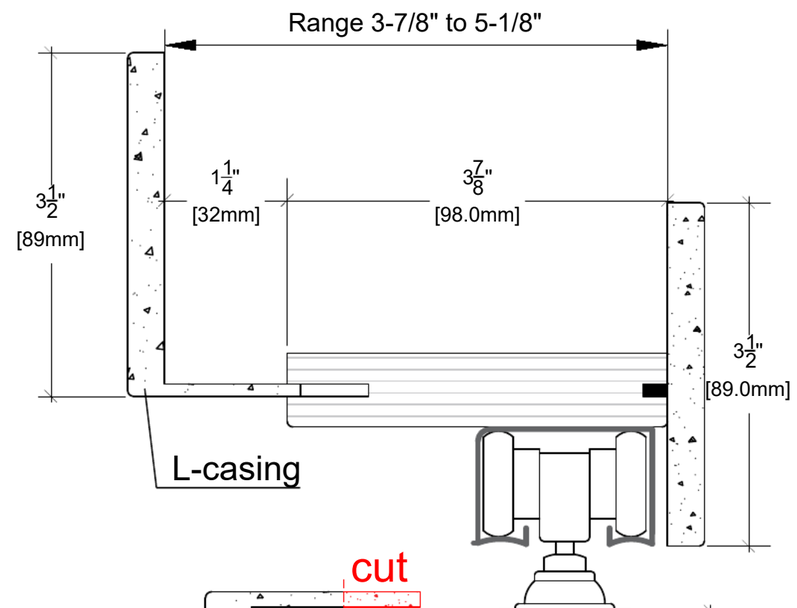

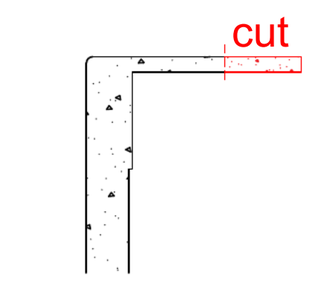

For wall thikness less then
4-1/2" need to cut L-casing

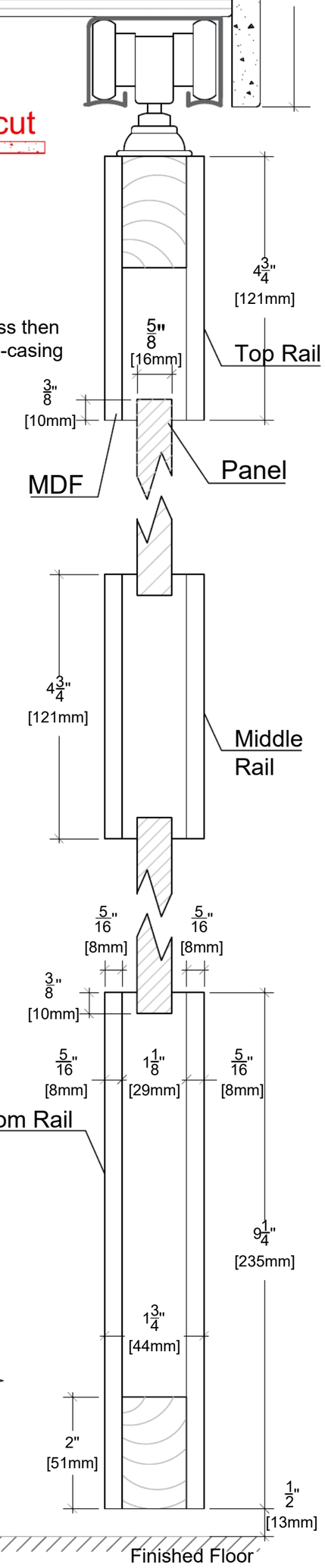

stile		stile	stile		stile	stile		stile	stile		stile	
2 3/8" [60mm]	7" [178mm]	2 3/8" [60mm]	2 3/8" [60mm]	7" [178mm]	2 3/8" [60mm]	2 3/8" [60mm]	7" [178mm]	2 3/8" [60mm]	2 3/8" [60mm]	7" [178mm]	2 3/8" [60mm]	(4) 11 3/4"
2 3/8" [60mm]	9" [229mm]	2 3/8" [60mm]	2 3/8" [60mm]	9" [229mm]	2 3/8" [60mm]	2 3/8" [60mm]	9" [229mm]	2 3/8" [60mm]	2 3/8" [60mm]	9" [229mm]	2 3/8" [60mm]	(4) 13 3/4"
2 3/8" [60mm]	10" [254mm]	2 3/8" [60mm]	2 3/8" [60mm]	10" [254mm]	2 3/8" [60mm]	2 3/8" [60mm]	10" [254mm]	2 3/8" [60mm]	2 3/8" [60mm]	10" [254mm]	2 3/8" [60mm]	(4) 14 3/4"
4 3/4" [121mm]	6 1/4" [400mm]	4 3/4" [121mm]	4 3/4" [121mm]	6 1/4" [400mm]	4 3/4" [121mm]	4 3/4" [121mm]	6 1/4" [400mm]	4 3/4" [121mm]	4 3/4" [121mm]	6 1/4" [400mm]	4 3/4" [121mm]	(4) 15 3/4"
4 3/4" [121mm]	8 1/4" [451mm]	4 3/4" [121mm]	4 3/4" [121mm]	8 1/4" [451mm]	4 3/4" [121mm]	4 3/4" [121mm]	8 1/4" [451mm]	4 3/4" [121mm]	4 3/4" [121mm]	8 1/4" [451mm]	4 3/4" [121mm]	(4) 17 3/4"

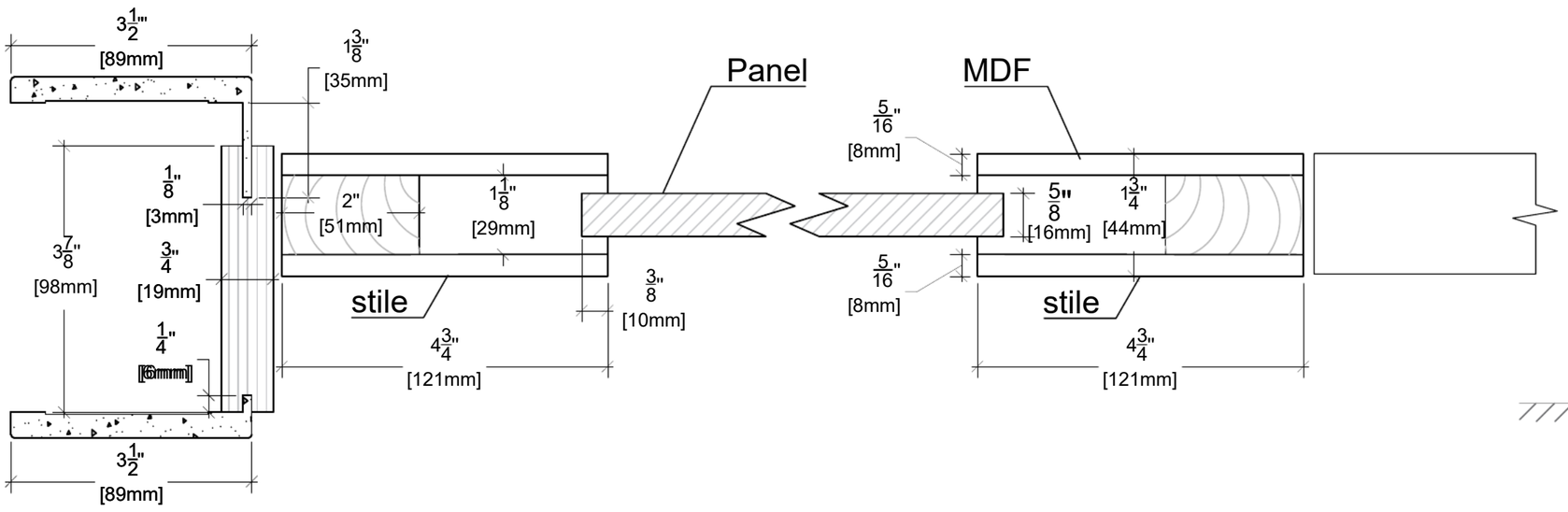

ALMES DOORS

Model: Shaker Style - 2 Panel
Configuration: D Bi-fold 81"