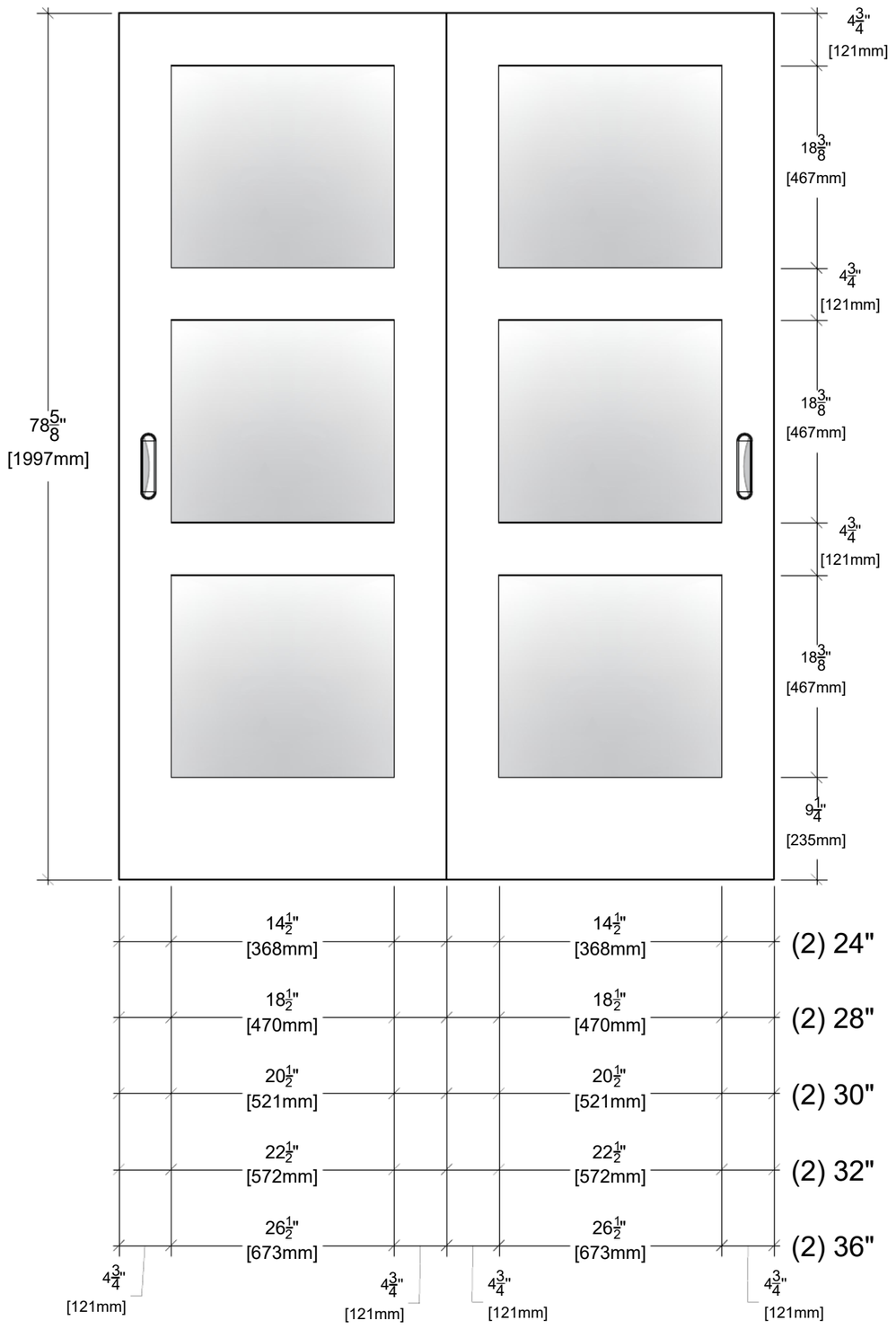

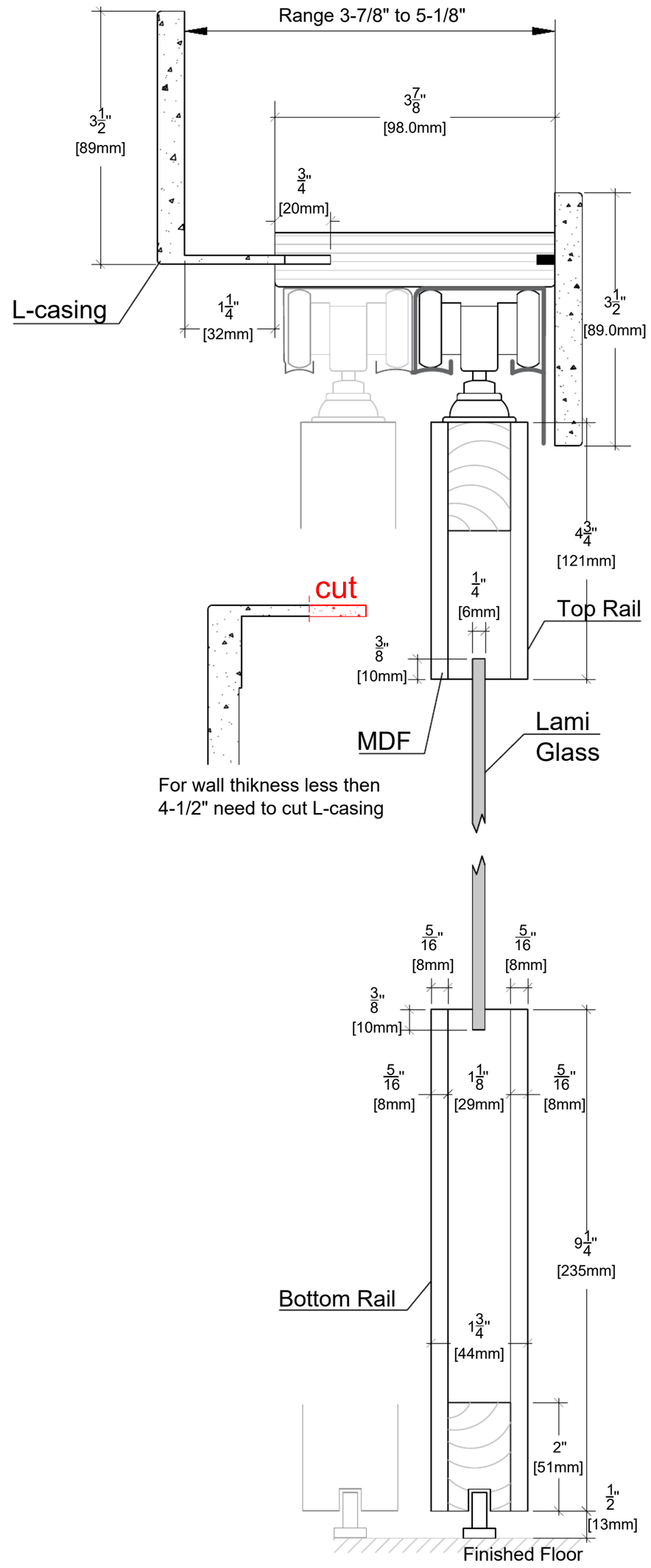

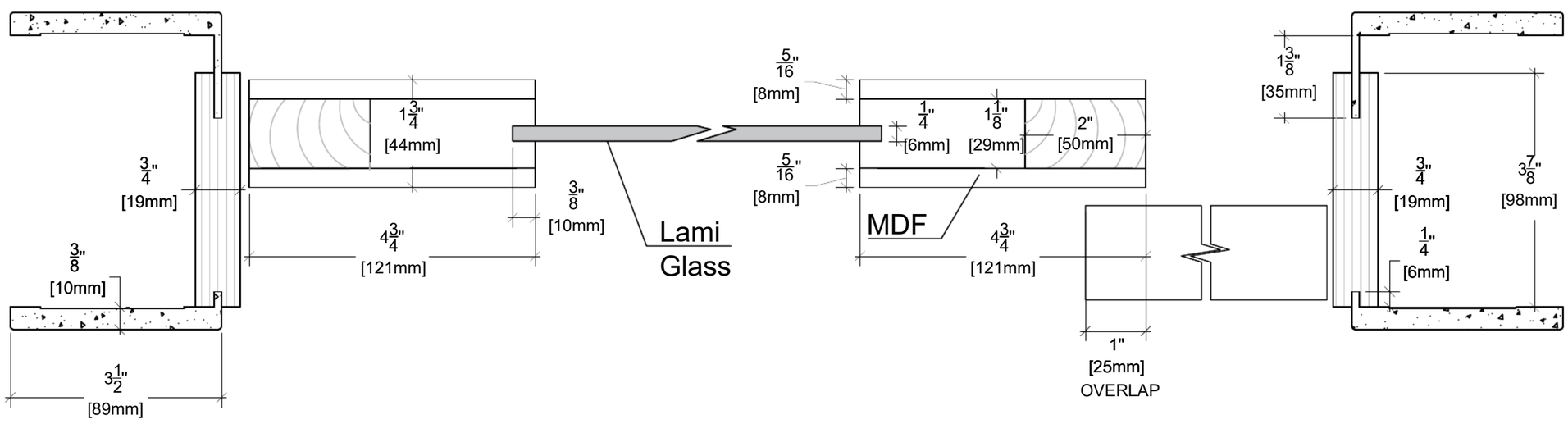

ALMES DOORS

Model: Shaker Style - 3 Eq Panel Light Lami Glass

Configuration: Bypass 80"