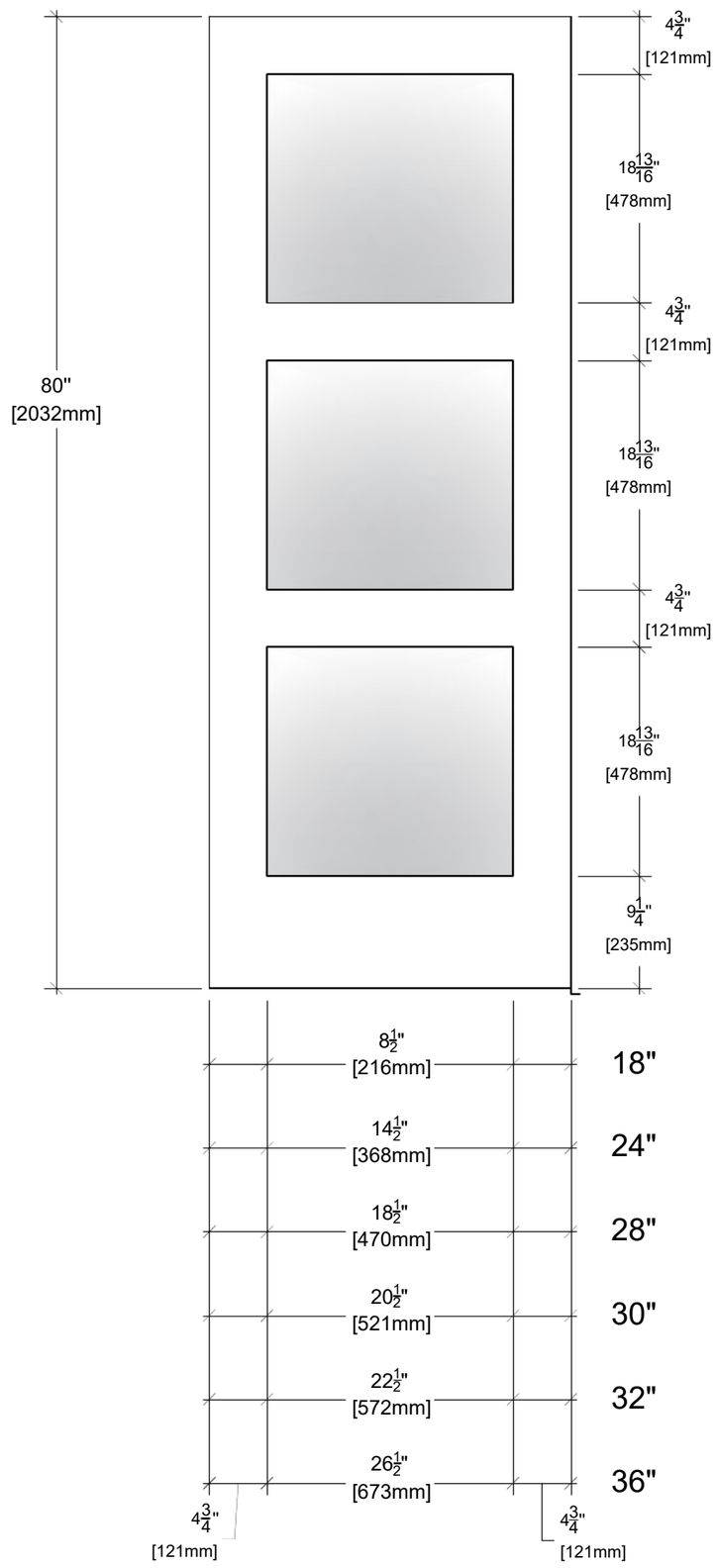

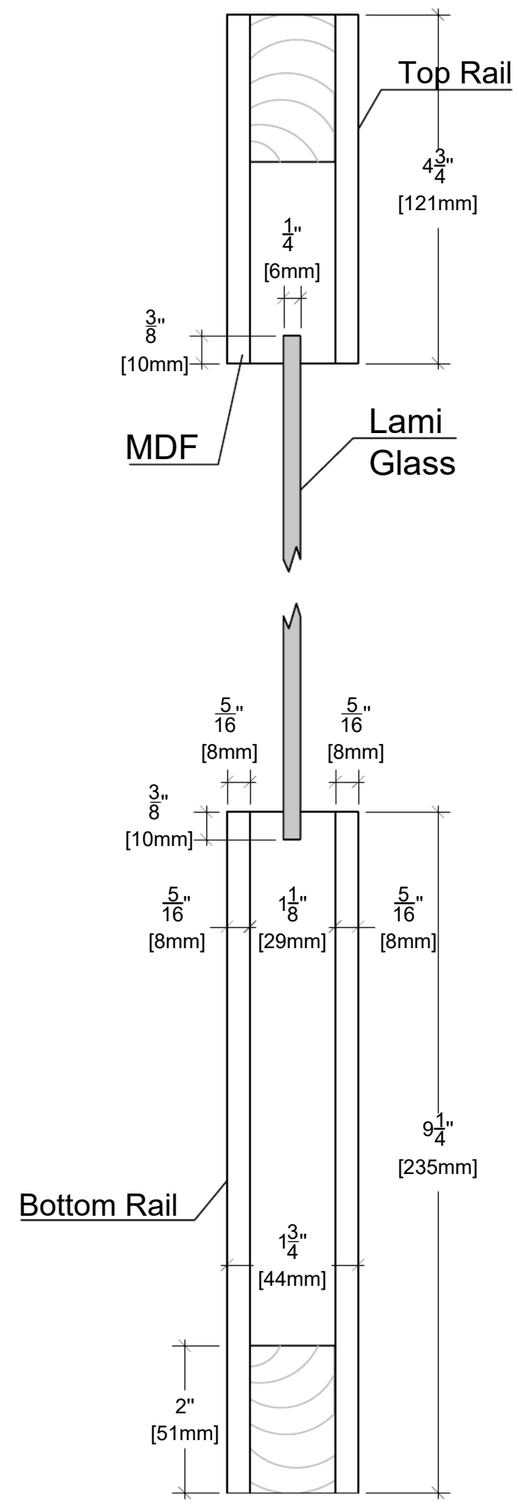

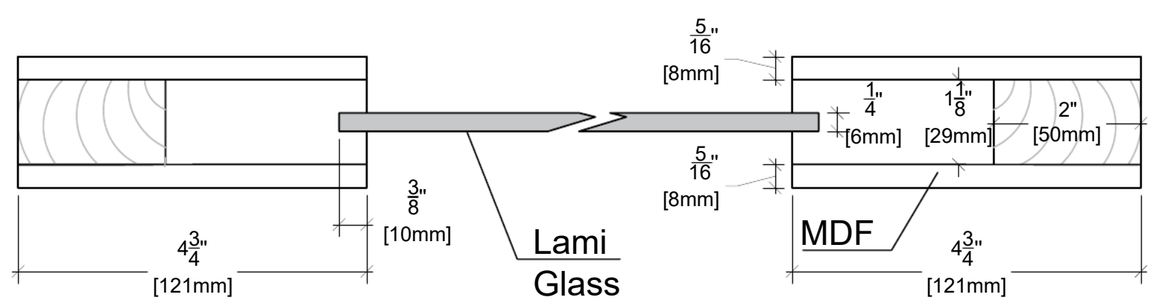

ALMES DOORS

Model: Shaker Style - 3 Eq Light Lami Glass

Configuration: Slab 80"