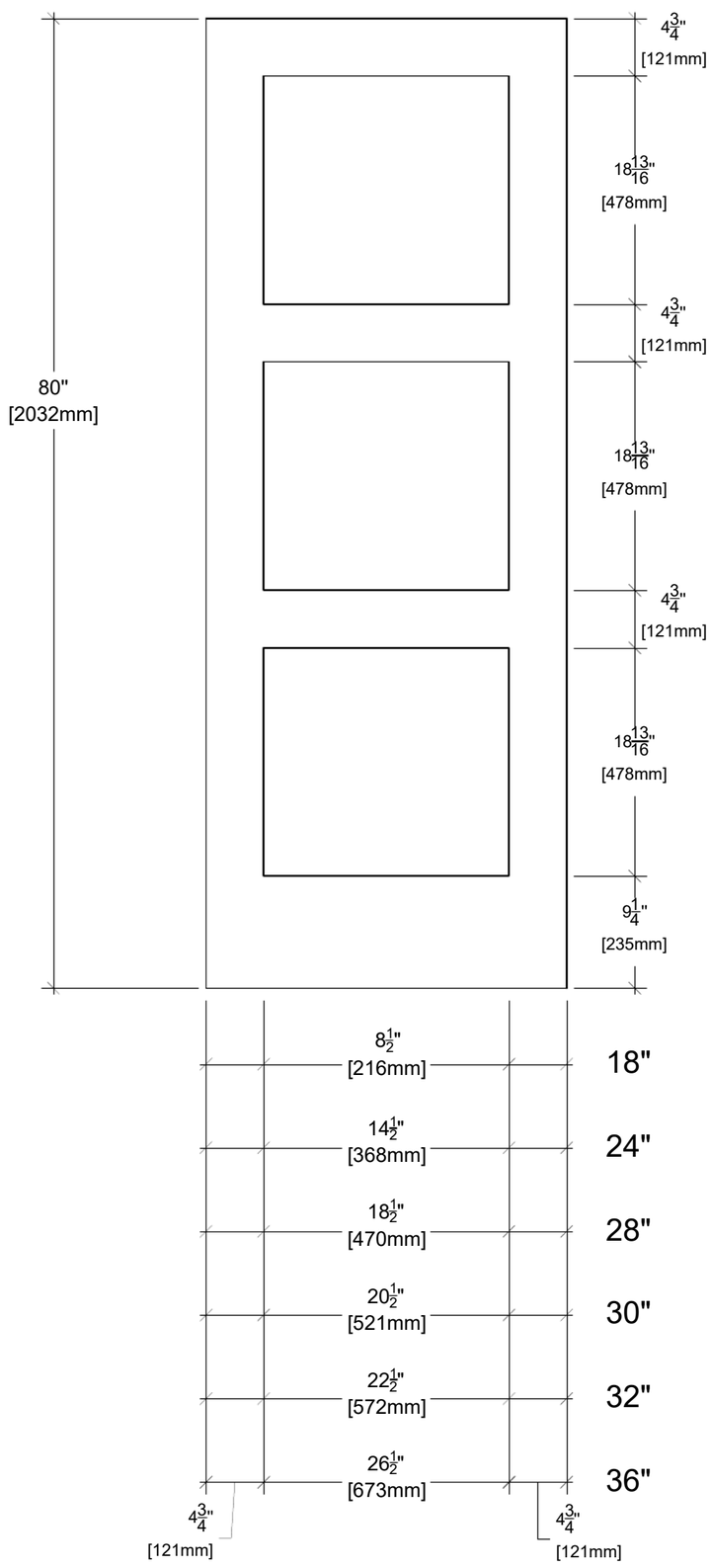

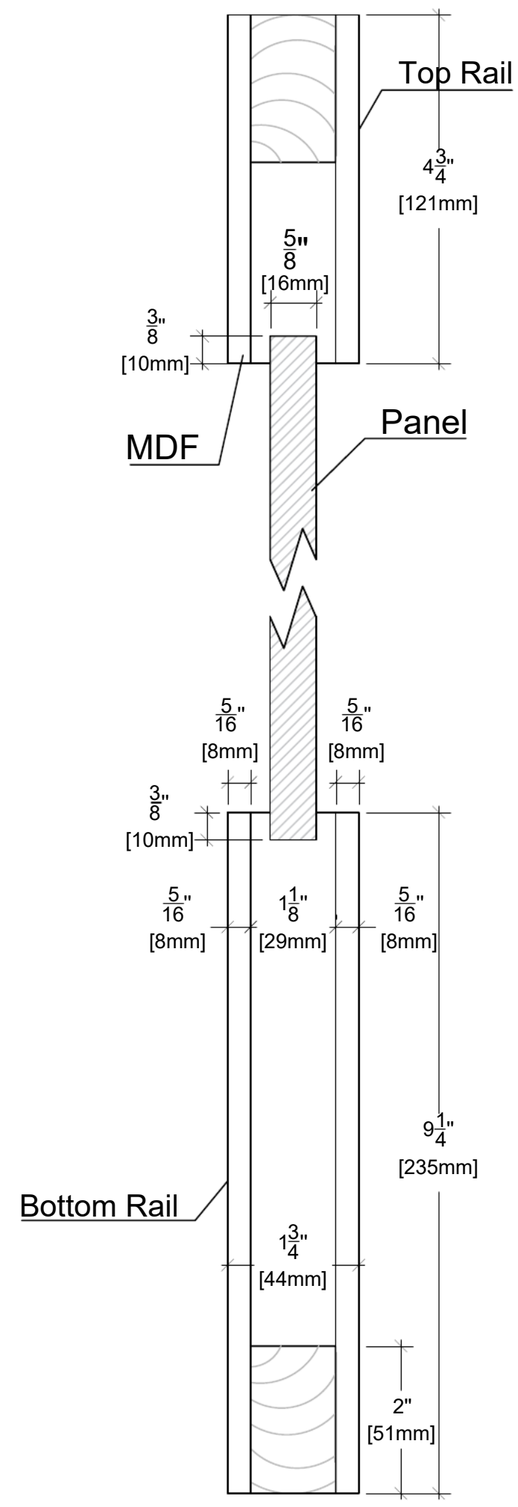

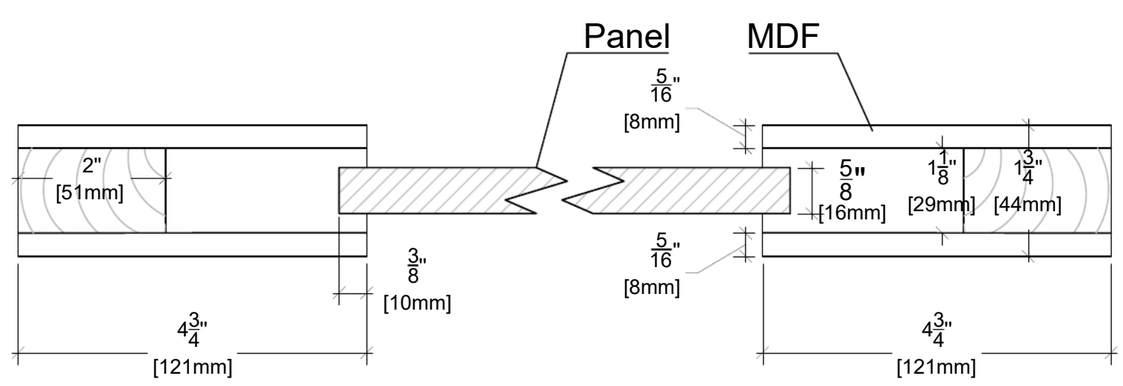

ALMES DOORS

Model: Shaker Style - 3 Eq Panel

Configuration: Slab 80"