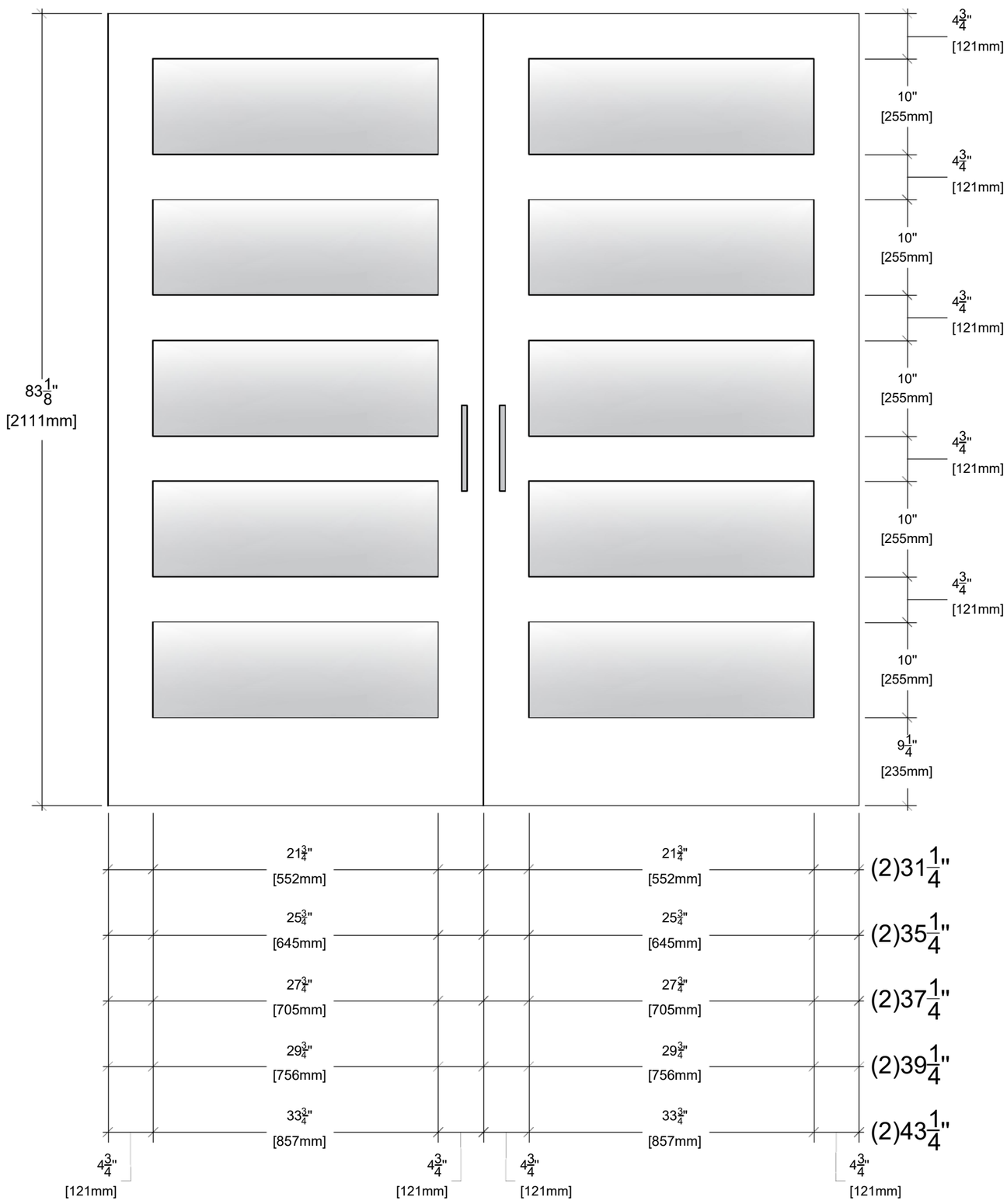

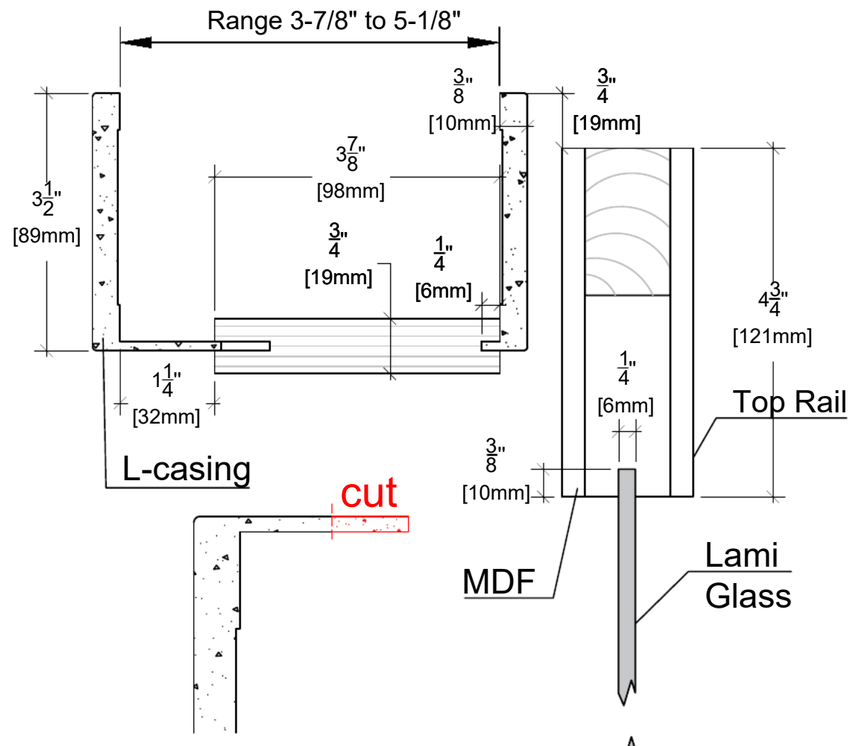

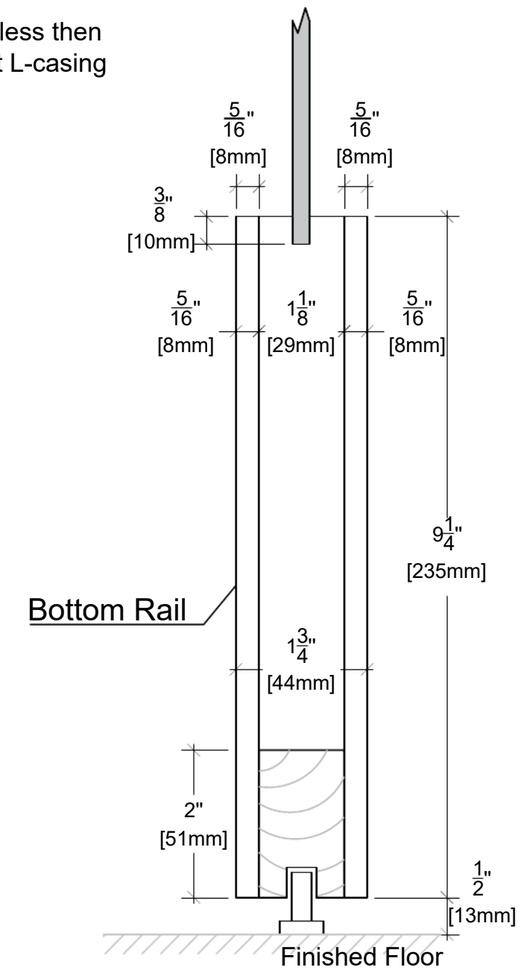

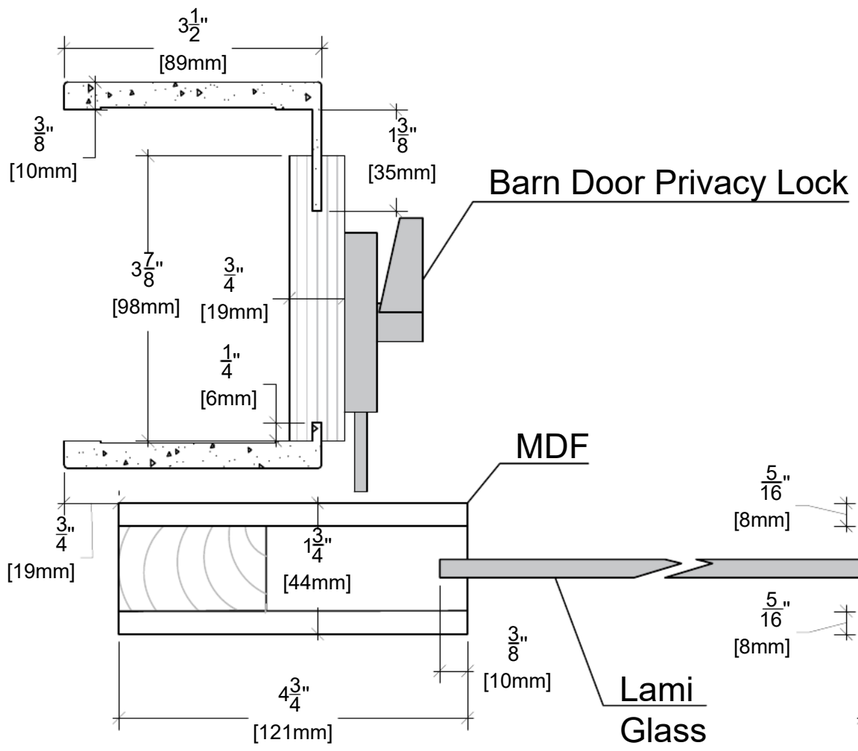

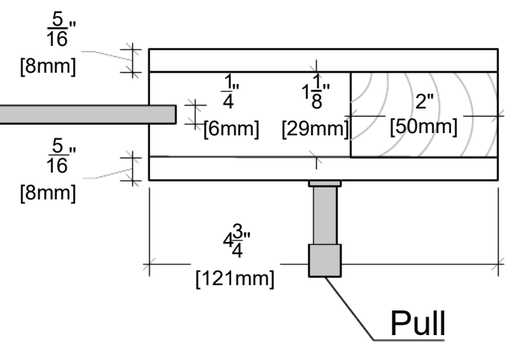

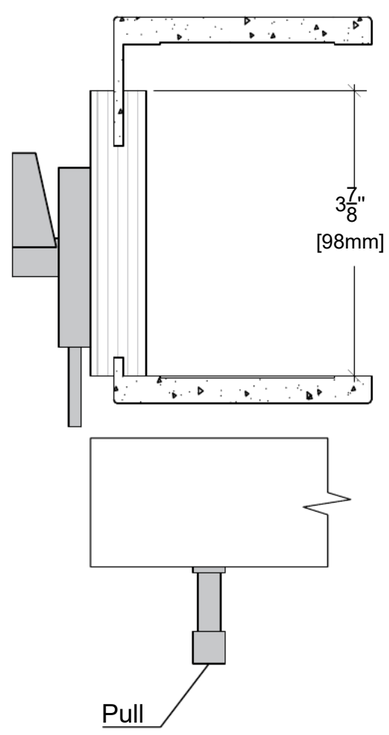

ALMES DOORS

Model: Shaker Style - 5 Eq Light Lami Glass

Configuration: D Barn 82"